Installation instructions

Transport | Installation | Operation | Maintenance

Product line:	NH_3 Condenser
Model range description:	V coil condensers
Model range:	AGVD

guntner.com/uk

Contents

1 Important basic information ... 5

1.1 Safety instructions ... 5

1.1.1 Observing the instructions ... 5

1.2 Importance of the EN 378 series of standards – refrigeration systems and heat pumps – safety-related and environmental requirements ... 5

1.3 Responsibilities ... 6

1.3.1 Manufacturer's responsibilities ... 6

1.3.2 Responsibilities of the system's installer ... 6

1.3.3 Owner or operator responsibilities ... 7

1.4 Legal note ... 7

1.5 Instructions ... 8

1.5.1 Scope ... 8

1.5.2 Set-up and other applicable documents ... 8

1.6 Conventions ... 8

1.6.1 Typographical conventions ... 8

1.6.2 List of abbreviations ... 8

1.7 Conventions for safety signs and notices ... 9

1.7.1 General safety symbols and their meanings in these instructions ... 9

1.7.2 Warning symbols and their meaning in these instructions ... 10

1.7.3 Prohibitory signs and their meaning in these instructions ... 11

1.7.4 Mandatory signs and their meaning in these instructions ... 11

2 Safety ... 12

2.1 Labelling on the unit ... 12

2.1.1 Safety signs on the unit ... 14

2.1.2 Labelling on the packaging ... 16

2.1.3 Other signs and notes on the unit or packaging ... 16

2.2 Basic safety notices ... 21

2.2.1 How to act in an emergency ... 21

2.2.2 Personnel, care requirements ... 22

2.3 Proper intended use ... 22

2.3.1 Use according to the intended purpose ... 22

2.3.2 Operating conditions ... 22

2.3.3 Improper use ... 23

2.4 Mechanical residual hazards ... 26

2.4.1 Fins, sharp unit corners and edges ... 27

2.4.2 Fans ... 27

2.5 Electrical residual hazards....28
2.6 Thermal residual hazards....28
2.6.1 Danger of burns....28
2.7 Residual hazards due to refrigerant/ammonia (NH_3)....29
2.8 Residual hazards caused by vibrations....30
2.9 Residual hazards caused by pressurised parts....31
2.10 Residual hazards caused by defective installation....32
2.11 Residual hazards with break during operation....34
2.12 Residual risks due to ejected parts and liquids....34
2.13 Residual hazards with disposal....35
3 Technical data....37
3.1 Heat exchanger (typical values)....37
3.2 Fans....37
4 Set-up and function....39
5 Fan motor....40
6 Transportation and storage....42
6.1 Safety....42
6.2 Transportation and storage....42
6.2.1 Transport and storage of humidification pads....44
6.3 Storage before installation....45
7 Set-up and start-up....46
7.1 Safety....46
7.1.1 Safety instructions for set-up and start-up....46
7.1.2 System-side safety requirements....48
7.1.3 Customer-side safety precautions....49
7.2 Requirements as regards the place of installation....50
7.3 Unpacking the unit....54
7.4 Installation....57
7.4.1 System-side requirements for stress-free installation....57
7.4.2 Mounting the vibration dampers (optional)....58
7.4.3 Installing hydroBLU....59
7.5 Notes on connecting the unit....72
7.5.1 Commissioning the hydroBLU system....72
7.5.2 Connect the unit to the system....74
7.5.3 Unit electrical connection and protection....75
7.6 Perform acceptance test....75
7.7 Test readiness for operation....76
7.8 Putting the unit into operation for the first time....77
8 Operation....78

8.1 Safety ... **78**
8.2 Putting the unit into operation ... **78**
8.3 Taking the unit out of operation ... **79**
8.3.1 Shutdown, dismantling and disposal ... 79
8.4 Shutting the unit down ... **80**
8.5 Putting the unit into operation after a shutdown ... **81**
8.6 Changing the unit over to another working fluid ... **81**
9 Troubleshooting ... **82**
9.1 Safety ... **82**
9.2 Service ... **82**
9.3 Troubleshooting table ... **82**
10 Maintenance ... **84**
10.1 Safety ... **84**
10.1.1 Before starting all maintenance ... 84
10.1.2 With all maintenance work ... 85
10.1.3 After all maintenance work ... 86
10.2 Inspection and maintenance plan ... **87**
10.2.1 Fans ... 87
10.2.2 Coil of the unit (heat exchanger) ... 88
10.2.3 Humidification pads ... 88
10.3 Maintenance work ... **89**
10.3.1 Remove leaks ... 89
10.4 Clean unit ... **90**
10.4.1 General ... 90
10.4.2 clean the coil ... 90
10.4.3 Cleaning fans ... 92
10.4.4 Cleaning humidification pads ... 93
11 Accessories ... **94**
11.1 Fall protection ... **94**
12 Plans/diagrams ... **100**
12.1 Electrics documentation ... **100**
12.1.1 Fan motor connection diagram ... 100

1 Important basic information

1.1 Safety instructions

1.1.1 Observing the instructions

⚠ WARNING

Being unaware of, or failing to acknowledge, the basic safety instructions and the safety regulations for handling and operating this unit can result in severe injury and damage to property.

- Always keep the instructions in the unit's immediate vicinity at all times.
- Ensure that the instructions are accessible to all people that have anything at all to do with the unit at all times.
- Ensure that the instructions are read and understood by all people that have anything at all to do with the unit.

1.2 Importance of the EN 378 series of standards – refrigeration systems and heat pumps – safety-related and environmental requirements

EN 378 deals with safety-related and environmental requirements for designing, constructing, producing, installing, operating, maintaining and disposing of refrigeration systems and cooling equipment.

EN 378 is oriented towards manufacturers, installers and operators of refrigeration systems and cooling equipment (see section 1.2. Responsibilities).

The objective of EN 378 is to restrict the possible hazards of refrigeration systems, cooling equipment and their working fluids (refrigerants and coolants) for people, property and the environment to a minimum.

Insufficient safety measures or non-compliance with safety-relevant regulations can result in:

- Breaks or ruptures on components with the danger of escaping materials (hazards caused by the influence of low temperatures, excess pressure, direct influence of the fluid phase, moving machine parts).
- Escaping working fluid after a break or leak because of defective design, improper operation, insufficient maintenance, repairs, filling and disposal (hazards caused by toxicity, corrosion, frostbite, suffocation, panic).
- Fire or explosions of escaping working fluid with subsequent danger of fire.

1.3 Responsibilities

1.3.1 Manufacturer's responsibilities

The notes provided in these instructions on maintaining the unit's functional safety, on preventing possible hazards during transport, set-up and installation, start-up and operation as well as maintenance activities (cleaning, servicing and repairing) refer exclusively to the unit.

The manufacturer's responsibilities are documented in the unit's version in acc. with EN 378-2 (design, manufacture and testing).

The materials used in the construction and for soldering are designed to withstand the foreseeable mechanical, thermal and chemical stresses, and are resistant to the working fluids used and to mixtures of such working fluids and the oils used to lubricate refrigeration compressors.

The working fluid-carrying parts of the unit (core tubes, distributor tube and header outlet) are configured so that they remain tight with the foreseeable mechanical, thermal and chemical stresses, and withstand the maximum permissible operating pressure.

Material, wall thickness, tensile strength, corrosive resistance, shaping process and testing are suitable for the working fluid used and withstand the possible pressures and stresses that might occur.

All responsibility for the equipment into which the unit is integrated, are the exclusive responsibility of the people involved in the individual workflows.

1.3.2 Responsibilities of the system’s installer

The responsibilities of the system installer are documented in the system’s version (design, manufacture and testing – in accordance with EN 378-2.

Interfaces between component supplier – installer of the system:

- Notify Güntner GmbH & Co. KG in the event of fault:
  In the event of problems during set-up, installation, start-up and operation, immediately contact Güntner GmbH & Co. KG.

The responsibilities of the system installer in particular include:

- Planning and preparing emergency measures:
  To avoid consequential damage caused by operational disruptions, a warning system which immediately signals all faults must be provided on-site. Prepare emergency measures that prevent consequential damage for people and property should faults occur.
- Specify checking and maintenance intervals:
  The system must be configured and equipped with all required equipment for maintenance and sufficient servicing and testing in accordance with EN 378-4.

When the unit is integrated into the refrigeration system , the unit's working fluid and version must not deviate from the order-related information specified in the order-related documents.

The installer of the system must refer to the requirement for sufficient instruction of the operating and supervision staff when operating and maintaining the equipment.

It is recommended that the future customer staff – if possible – be present during the set-up and installation, for tightness tests and cleaning, while the system is being filled with working fluid and for the adjustment of the equipment.

1.3.3 Owner or operator responsibilities

The owner or operator responsibilities are documented in the operation, maintenance, servicing and recovery of the system in accordance with EN 378-4.

The owner or operator must ensure that the proper people are sufficiently trained and qualified for operating, monitoring and servicing the system .

The operating personnel for the system must have sufficient knowledge and experience with regard to the mode of operation, operation and daily monitoring of this system .

Before starting up the system the owner or operator must ensure that the operating personnel are adequately instructed about the system's documentation (which these instructions belong to) on the set-up, monitoring, mode of operation and maintenance of the system and about the safety measures to be observed as well as the properties and handling of the working fluid to be used.

The owner or operator must ensure that when operating, monitoring and maintaining the system the working fluid and version must not deviate from the details specified in the order-related documents.

Planning and preparing emergency measures: To avoid consequential damage caused by operational disruptions, a warning system must be installed on the customer's premises. Prepare emergency measures that prevent consequential damage for people and property should faults occur.

Responsibility remains with the owner or operator of the system , if the system is used by anybody else, unless there is a contrary agreement on sharing responsibility.

If you operate units that are wetted or sprayed with water, you must observe the contents of the VDI guideline 2047-2 “Requirements for the hygienic operation of cooling towers”, the specifications of the 42nd BImSchV (Federal Immission Control Ordinance) and the VDMA leaflet “Notes and recommendations for operating and maintaining evaporation cooling plants” (“Hinweise und Empfehlungen zum Betrieb und zur Wartung von Verdunstungskühlanlagen”).

1.4 Legal note

Note that warranty claims require the existence of a defect that must be proved. These installation instructions are part of the unit and must be observed in their entirety. Damage and malfunctions resulting from the failure to comply with the installation instructions are not covered by the warranty. This applies in particular to the use of spare parts other than those specified (original spare parts in case of doubt) and modifications to the unit compared to its original condition on delivery without the consent of Güntner GmbH & Co. KG. Modifications in this sense are, in particular, the use of working fluids other than those specified, changes to the operating parameters and mechanical changes such as metal-cutting operations (e.g. drilling) without sufficient protection of the unit from the chips produced.

1.5 Instructions

1.5.1 Scope

These instructions apply to condensers in the model range AGVD.

The units are components of a system, e.g. for conditioning and circulating the room air in storage rooms

NOTICE
You will find the precise type of your unit in the attached order-related documents.

1.5.2 Set-up and other applicable documents

In addition to these instructions, please refer to the following documents:

- Declaration of incorporation (Art. 13 and Annex II Part B of the Machinery Directive 2006/42/EC)
- Documentation on selected accessories, if any
- Connection diagram (included with the terminal box)
- For further technical data, see nameplate

These instructions are also part of the plant's operating instructions that are provided by the manufacturer of the plant.

1.6 Conventions

1.6.1 Typographical conventions

The following text markups are used in these instructions:

Bold	Requires special attention!
Grey triangle	Instructions

1.6.2 List of abbreviations

Abbreviations	Meaning
NH_3	Ammonia refrigerant
EN 378	European Norm 378: Refrigeration systems and heat pumps; safety-related and environmental requirements
EN	European Norm
DIN	German industrial standard (specification of a standard)
ISO	International Standardization Organization .

Abbreviations	Meaning
°C	Degrees Celsius (Celsius scale temperature)
bar	Unit of pressure
l	Litre (liquid volume)
Vol%	Volume percent (concentration level relative to a volume)
IP	Insulation protection
Q 6,3	Balancing quality
ppm	parts per million, concentration figure, stands for “millionth part”
Hz	Hertz (frequency)
D	Delta connection (alternating current: high speed)
S	Star connection (alternating current: low speed)
3~	3-phase current
1~	1-phase alternating current
VDE	“Verband der Elektrotechnik, Elektronik und Informationstechnik” (Association for Electrical, Electronic & Information Technologies)
TCC	Technical Connection Conditions
EPC	Electric Power Company
VDI	“Verein Deutscher Ingenieure” (German engineers’ association)

1.7 Conventions for safety signs and notices

1.7.1 General safety symbols and their meanings in these instructions

⚠ DANGER
Dangerous situation that will definitely cause serious injury or death if it is not avoided.

⚠ WARNING
Dangerous situation that could cause serious injury or death if it is not avoided.

⚠ CAUTION
Dangerous situation that could cause slight to moderate injury if it is not avoided.

NOTICE
Indicates additional useful information and possible property damages.

1.7.2 Warning symbols and their meaning in these instructions

Warns against hand injuries!
Failure to comply with warnings may result in hands or fingers being crushed, dragged in or otherwise injured.

Warns against hot surfaces!
The temperature is over +45°C (at which protein clots) and can cause burns.

Warns against dangerous electrical voltage!
Danger of an electric shock if voltage-carrying parts are touched.

Warns against potentially explosive substances at set-up point
Use of ignition sources can cause explosions at set-up point.

Warns against fire-risk substances at set-up point.
Use of ignition sources can cause fire at set-up point.

Warns against corrosive substances
Contact with corrosive substances can cause injuries, especially to the eyes.

Warns against harmful to health or irritant substances at set-up point
Contact with or inhaling substances that are irritant or harmful to health can cause injuries or damage peoples' health.

Warning of automatic start-up
If the unit starts up automatically during maintenance work there is a danger of pinching/trapping the hands and fingers.

Warns against toxic substances at set-up point
Contact with or inhaling toxic substances can cause injuries or damage the health.

1.7.3 Prohibitory signs and their meaning in these instructions

Fire, open fire and smoking prohibited!
Ignition sources must be kept away and ignition sources must not develop!

No smoking!
Smoking is forbidden.

1.7.4 Mandatory signs and their meaning in these instructions

Use eye protection!
Eye protection: Use protective cover, protective glasses or face protection.

Use hand protection!
Protective gloves must protect against mechanical and chemical dangers (see imprinted pictograms).

Use respiratory protection!
Breathing apparatus must be suitable for the working fluid used. Breathing apparatus must consist of:

- At least two independent breathing devices (self-contained breathing apparatus)
- For ammonia: an additional breathing apparatus with filter (full mask) or an independent breathing apparatus (self-contained)

Use protective clothing!
Personal protective clothing must be suitable for the working fluid used and for low temperatures, and must have good heat insulation properties.

Disconnect prior to work!
Disconnect the electrical system and secure against switching on again before starting installation, maintenance and repair work.

2 Safety

2.1 Labelling on the unit

Position of the labels on the unit

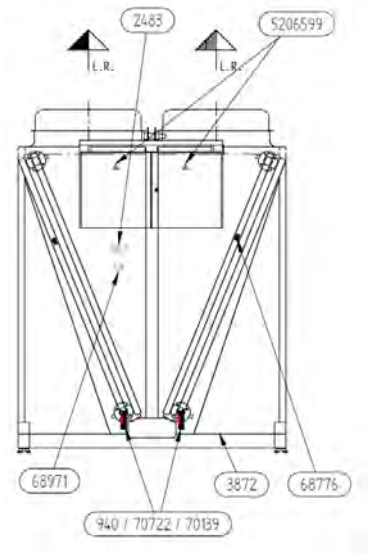

Markings on the unit (view from left)

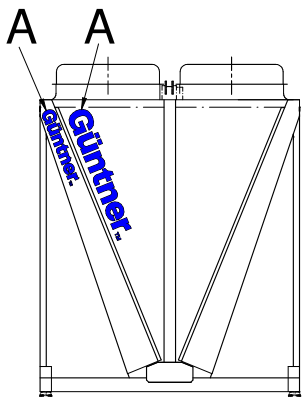

Markings on the unit (view from right)

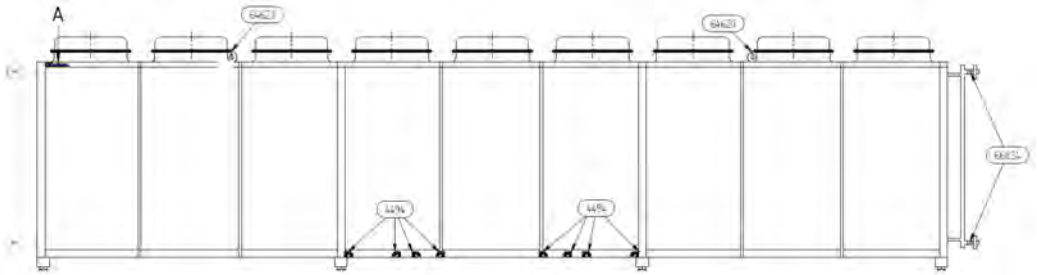

Markings on the unit (front view)

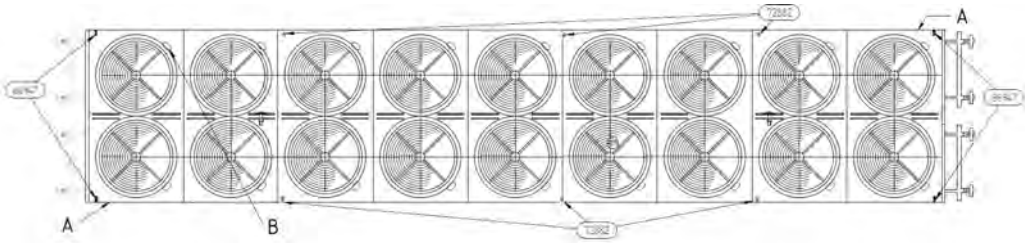

Markings on the unit (top view)

A - Güntner logo (white if the unit is dark-coloured)

B - Number for fan 1, 2, 3, ...

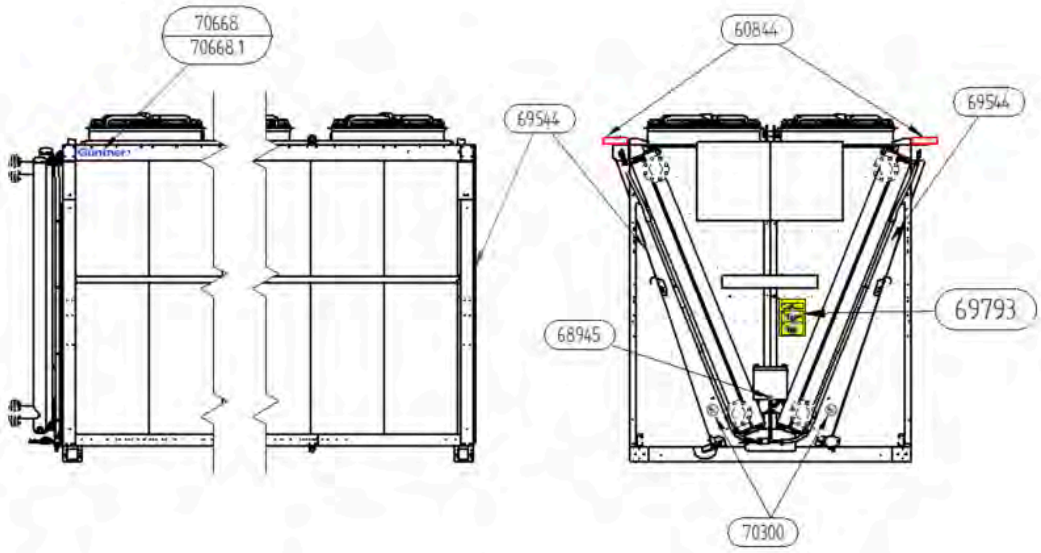

Labels on the unit with hydroBLU

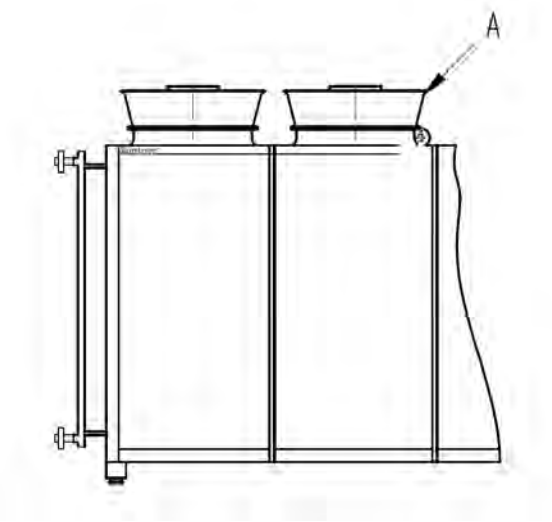

Markings on the unit with diffuser
Markings on the unit with diffuser

A - Diffuser.
Note: For instructions on mounting the diffuser, see the installation instructions by ebm-papst!

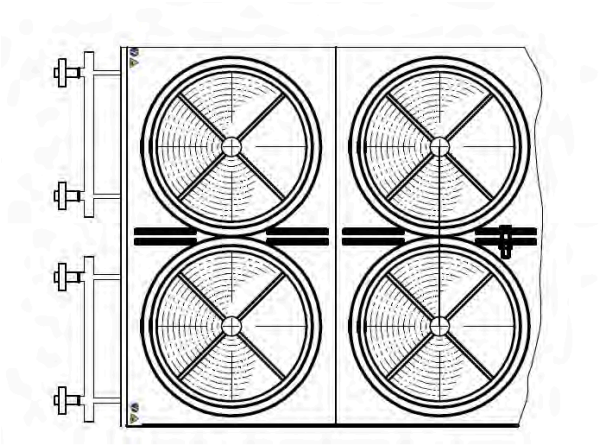

With diffuser (top view)
With diffuser (top view)

2.1.1 Safety signs on the unit

Safety signs on the unit individually:

940 – Warning “Transport filling” on the Schrader valve

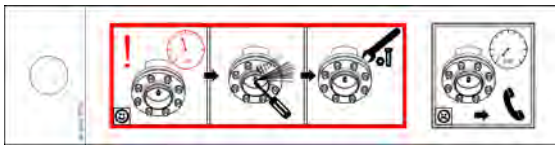

70722 – Transport filling

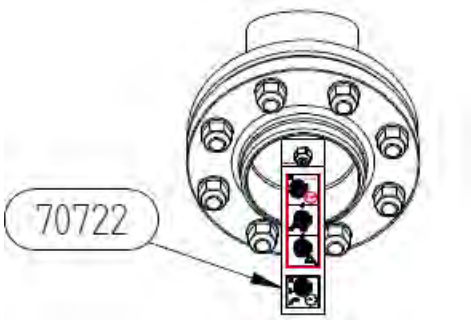

70722 with flange

66947 – Mandatory sign/warning sign: Completely disconnect/warning of hand injury

64620 - Lifting point

60325, 68776 – Warning “Do not load. Do not lift.”

5206599 – Warning “Voltage” (for electrical attachments)

3872 – Earthing marking

70299, 70300 – Warning “No open flame” (in case of hydroBLU)

72882 – Maximum permissible load on the unit surface

2.1.2 Labelling on the packaging

Labels on the packaging

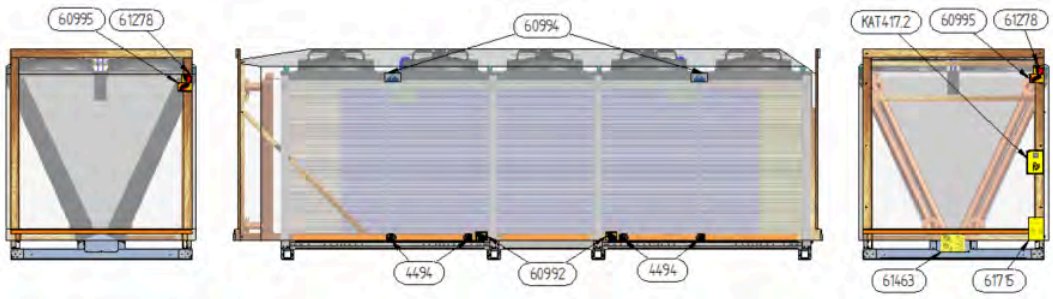

Packaging

2.1.3 Other signs and notes on the unit or packaging

Güntner GmbH & Co.KG
Hans-Güntner-Straße 2-6
82256 Fürstenfeldbruck
www.guentner.de

CE 0036 PED *
Ex II 2G IIB T4

Güntner

Projektnummer – Project number	101014529		
Gerätebezeichnung - Unit name	GVH 100.3B/2x4-L(S).E		
Gerät Seriennummer - Device serial number	404157434/52.00042		
Ventilator / ID / Drehzahl - Fan / ID / Speed	VT01407 / 2008 / 480 min -1		
Umgebungstemperatur – Air ambient temperature	-30°C / +50°C		
Herstellungsjahr - Year of manufacture	2015		
*Druckgerät Seriennr. – pressure equipment serial no.	404157435/52.02100		
Volumen – Volume (V)	297.5 l		
Max. zulässiger Druck (PS) Max. allowable pressure (PS)	32 / 0 bar	24 / 0 bar	0 / -1 bar
Zulässige min./ max.. Temperatur (TS) Allowable min./ max. temperature (TS)	-10°C / +100°C	-50°C / -10°C	-5°C / +40°C
Prüfdruck (PT) / Prüfmedium Test pressure (PT) / Test medium	35,2 bar / Druckluft - Compressed air		
Prüfdatum - Test date	15.02.2015		
Fluidgruppe / Zustand - Group of fluid / State	2 / gasförmig - gaseous		

2483 - Example of a nameplate

706**, 2118, 2119 – Güntner logo

66824 and 68909 - Connections IN and OUT

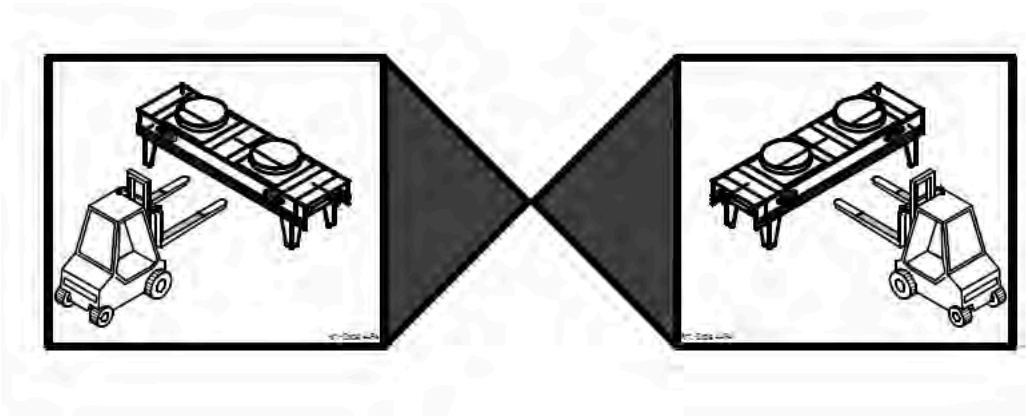

4494 - Usage area for forklifts with position arrows; units with up to two fans

70274 - Only for transport (with hydroBLU)

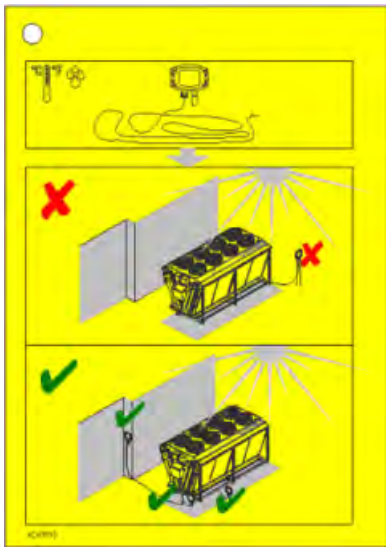

69793 - Temperature sensor installation (with hydroBLU)

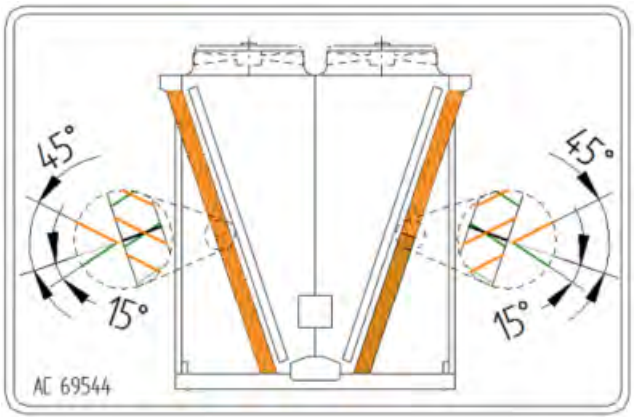

69544 - Humidification pads installation (with hydroBLU)

60844 - Transport safety screw (with hydroBLU)

68945 - Pressure limit for water line (with hydroBLU)

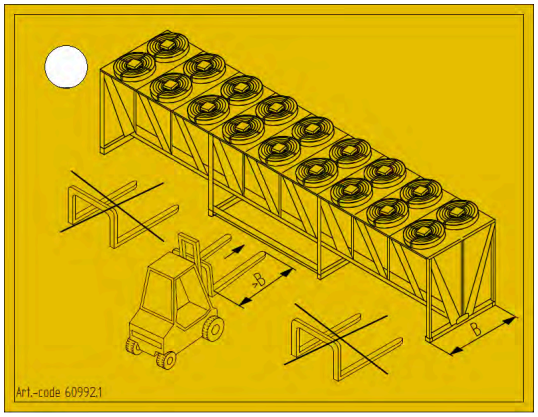

60992.1 - “Fork-lift transport” notice

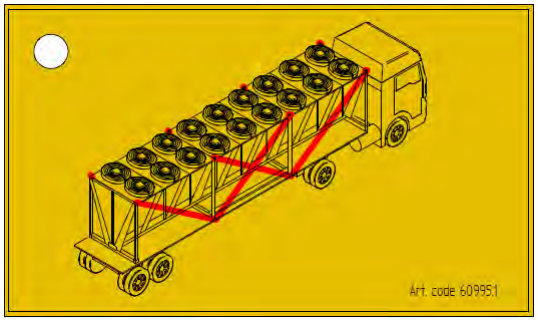

60995.1 - “Eyelet” notice

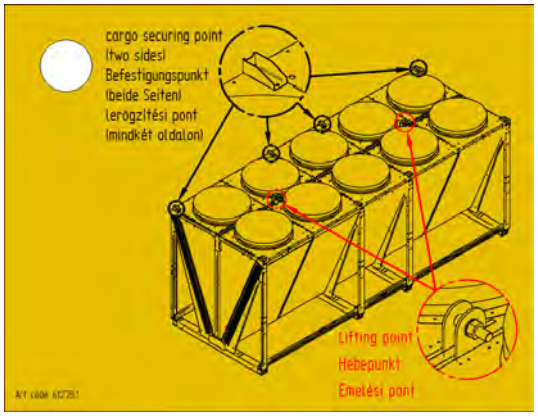

61278.1 - “Lifting and fixing point” notice

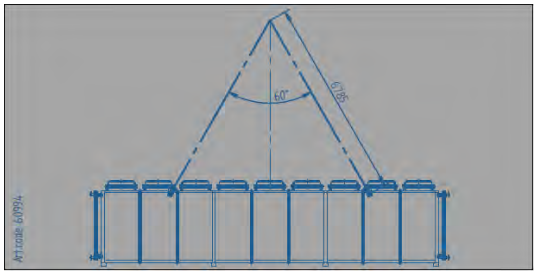

60994 - “Crane lifting instruction” notice

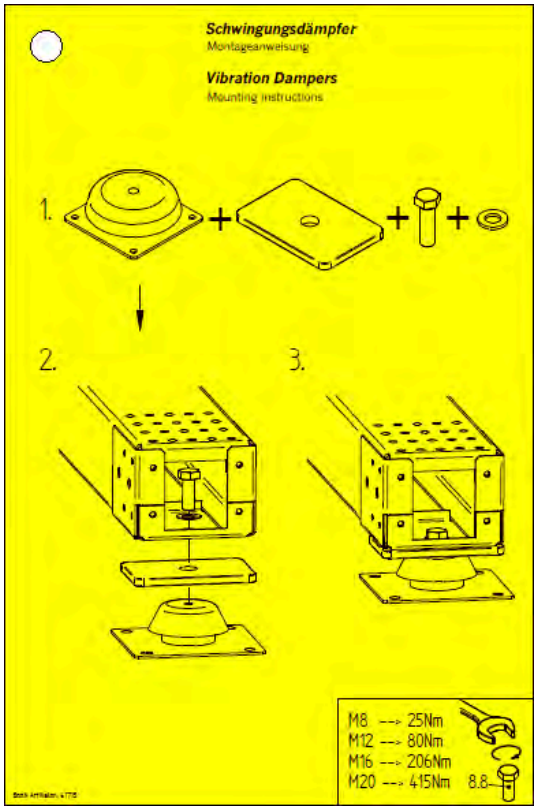

61715 - “Vibration dampers” notice

Only for units with optional vibration damper; for mounting the vibration dampers (supplied loose)see "Mounting the vibration dampers (optional)", page 58

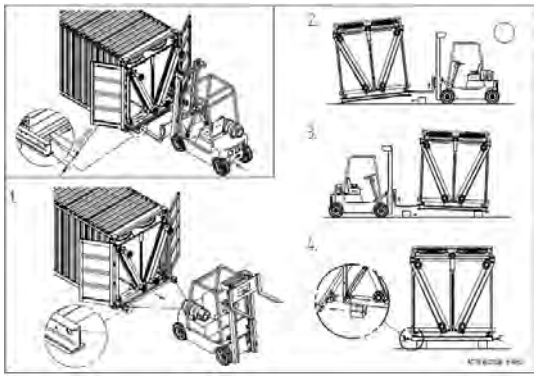

61463 - Transport instructions for containers

2.2 Basic safety notices

2.2.1 How to act in an emergency

⚠ WARNING

Danger of injuries and damage to property!
The unit contains ammonia as a refrigerant (NH_3). Ammonia is a potentially explosive and fire-risk substance. Unintentionally carried in oil residues and unintentionally carried in refrigerant can ignite. An explosion can cause the most serious injuries and loss of limb.
Ammonia is a corrosive, toxic irritant gas. From an ammonia concentration of 0.2 vol % in the ambient air or with a long stay in the ammonia-containing ambient air ammonia can be life-threatening or fatal.
Safety measures and procedure:

- In the event of serious unexpected leakage of refrigerant, leave the set-up room immediately and activate the emergency measures provided, e.g. if:
  - Visibly escaping ammonia liquid or vapour from the heat exchanger or pipe components.
  - Sudden large release (release and evaporation of the greater part of the entire refrigerant filling in a short time, e.g. in less than 5 minutes).
  - Sudden strong smell; very irritating; immediate irritation of the eyes, nose and air passages.
  - Activate NH_3 alarm device (NH_3 concentration > 200 ppm):
- Have experienced, trained personnel with prescribed protective clothing perform all necessary protective and other measures:
  - Use respiratory protection.
  - Use a self-contained breathing apparatus for repair work in areas with high ammonia concentrations in the ambient air.
  - Ensure the set-up room is well ventilated.
  - Divert escaped refrigerant vapour and escaped refrigerant liquid safely.
- Instructions for dealing with injuries:
  - Call an emergency doctor immediately!
  - Liquid ammonia can cause frostbite or corrosive injuries on the skin or eyes.
  - The injured person must keep breathing apparatus on until further notice to prevent inhalation of vapours from ammonia contaminated clothing.
  - Shower the injured person for five to fifteen minutes with water. Remove the clothing careful during the shower. If ammonia-contaminated clothing is removed without wetting with water first, the injury can worsen, as firmly frozen skin may be torn away. Showering should be with warm water as much as possible to prevent a temperature shock. If available, use an emergency shower; otherwise use a water hose.

2.2.2 Personnel, care requirements

⚠ CAUTION

The unit may be installed, put into operation, operated, maintained and repaired only by trained, experienced and qualified personnel. In order to be considered qualified, people who are to be responsible for the operation, maintenance, repair and evaluation of systems and their components must have the necessary training and specialist knowledge for such work, as stipulated in EN 378-1. Qualified or expert means the ability to satisfactorily perform the activities required for the operation, maintenance, repair and evaluation of refrigeration systems and their components.

The unit may be operated by operating personnel that have no specific knowledge of refrigeration engineering, but have sufficient knowledge and experience with regard to the mode of operation, operation and daily monitoring of this system, . This operating personnel may not make any interventions or settings on the system.

Changes to the unit, which the manufacturer has first agreed to in writing, may only be made by the instructed and qualified personnel.

Electrical installation:
Work on the electrical equipment may only be performed by personnel that have the required expertise (e.g. an electrician or an electro-technically instructed person), and who are authorised by the operator, in compliance with the respective VDE regulations (and national and international provisions) and the TCCs of the EPCs.

2.3 Proper intended use

2.3.1 Use according to the intended purpose

Condensers of the AGVD series are heat exchangers for outdoor installation. Condensers liquefy the refrigerant by dissipating heat to the air that is guided over the dry heat transfer surface by fans.

The unit is delivered for operation with a specific operating point:

- Condensation temperature
- Airflow volume
- Air inlet temperature
- Relative air humidity.

The specified operating point is given in the order-related documents.

2.3.2 Operating conditions

The unit is a component of a plant including its working fluid circuit. The purpose of these instructions, as part of the operating instructions of the plant is to minimise the potential hazards to persons, property and the environment from the unit and the working fluid used in it. These hazards are essentially connected with the physical and chemical properties of the working fluid and with the pressures and temperatures that occur in the working fluid-carrying components of the unit see "Residual hazards due to refrigerant/ammonia (NH_3)", page 29.

⚠ WARNING

Danger of injuries and damage to property!

The unit must be used only in accordance with the proper intended use. The operator must ensure that when operating, monitoring and maintaining the unit, the fluid and unit type do not deviate from the order-specific information specified in the order documents.

The operator must ensure that maintenance measures are performed in compliance with the operating instructions of the plant.

Filling the unit with a different fluid is permitted only following written approval by the manufacturer. You will find the order-related proper use as intended in the order-specific documents.

Do not exceed the max. operating pressure given on the unit's type plate.

2.3.3 Improper use

General

The unit is being used improperly if:

- An unspecified working fluid, an unspecified pressure and/or an unspecified temperature are used,
- The unit is not disconnected from the mains for cleaning/maintenance purposes,
- The supply line (electric) is fused or dimensioned incorrectly by the customer.
- The unit is operated in an environment or for capacity requirements (e.g. aggressive/corrosive environment; capacity range) the unit with its material combination or capacity is not designed for, or which do not correspond to the intended use.

⚠ WARNING

Danger of injuries and damage to property!

Working fluids and their combinations with water or other substances in the working fluid-carrying components have chemical and physical effects from the inside on the materials surrounding them. The unit may be pressurised only with NH_3. Operating the unit with other working fluids would have the effect that

- the structural and welding materials used would be unable to withstand the foreseeable mechanical, thermal and chemical stresses and the pressures that may occur during operation and when shut down,
- the material, wall thickness, tensile strength, toughness, corrosion resistance, shaping process and tests performed at the factory are not suitable for other working fluids and cannot withstand the pressures and stresses that may occur,
- the unit would not be resistant to the other working fluid and the combination of the other working fluid,
- the unit may not remain tight during operation and when shut down and
- a possible sudden escape of working fluids could directly endanger people and/or property and the environment.

The maximum permissible operating temperature specified on the type plate must not be exceeded! If the operating temperature is exceeded,

- the unit would be exposed to an impermissibly high pressure (pressure/temperature correlation),
- signs of material fatigue would emerge,

The maximum permissible operating pressure specified on the type plate must not be exceeded! If the operating pressure is exceeded,

- the parts of the unit carrying the working fluid might not withstand the foreseeable mechanical, thermal and chemical stresses and the pressures that may occur during operation and when shut down,
- the unit would not remain tight during operation and when shut down,
- there may be a possible sudden escaping of working fluids after a break or leakage on working fluid-carrying components, which would result in the following dangers:
  - Hazard due to ejected materials,
  - Danger of poisoning
  - Fire hazard
  - Explosion hazard
  - Chemical burn hazard
  - danger of frostbite (caused by liquid coolant squirting/splashing),
  - Suffocation hazard
  - hazards caused by panic reactions,
  - Environmental pollution

⚠ WARNING

NH_3 condenser must not be used

- where it is possible that short or prolonged effect caused by contact, inhalation or ingestion of the working fluid NH_3 might result in harmful or fatalhazards.
- where it is possible that the lowest concentrations of the NH_3 refrigerant in a homogeneous mixture with air could ignite.
- where it is posssible that a sudden major release (release and evaporation) of the greater part of the entire working fluid charge occurs in a short time (e.g. in less than 5 minutes).
- where it is posssible that the longest time during which persons are exposed to a major release of the refrigerant NH_3 is more than 10 min.,
- in an occupied space that is not a special machinery room (in accordance with EN 378-2), the refrigerant charge (NH_3) of the unit exceeds 50 kg,
- if the staff density in the cold room where the unit is installed exceeds 1 person per 10 m² and the number of clearly marked emergency exits is not available for the number of persons usually present.

The unit must not be modified without prior written consent of Güntner GmbH & Co. KG. Modifications to the unit are:

- Changing the operating point (in accordance with section see "Heat exchanger (typical values)", page 37)
- Changing the fan capacity (air volume)
- Changing the volume of working fluid flowing through
- Changing over to another working fluid
- Changeover of the originally designed defrost technology (if any)

The unit must not be operated if safety devices recommended by the manufacturer are not available, not properly installed or not fully functional.

The unit must not be operated if it is damaged or shows signs of faults. All damage and faults must be reported to Güntner GmbH & Co. KGimmediately and must be rectified without delay.

Work on the unit must not be performed without the personal protective equipment prescribed in these instructions.

2.4 Mechanical residual hazards

⚠ WARNING

RISK OF SLIPPING! RISK OF TRIPPING! RISK OF FALLING!

A person slips when accessing the unit or on the ladder or on the unit surface, or trips over a protruding part and falls.

- Arrange the unit's surroundings in such a way as to ensure safe access and safe working on the unit at all times – even in adverse weather conditions.
- Check all fixing bolts and fixing devices regularly and especially before and after lifting the unit for corrosion damage, load-bearing capacity and structural integrity, and replace them if necessary.
- Watch out for obstacles and tripping hazards.
- The system operator and the operating personnel respectively must take appropriate safety measures against falls.
- Observe the maintenance schedule.
  - Wear personal protective equipment (work gloves and slip-resistant safety shoes or safety shoes with slip-resistant overshoes).
  - Stepping onto the unit surface is permitted only if the total weight does not exceed 150 kg and appropriate fall protection is in place.
  - Check the unit surface for snow/ice and remove it if there is any.
  - In bad weather conditions (water on the unit, clear ice, gusts of wind), take particular care when walking on the unit surface!
  - Never step on the fans.
  - Always maintain a sufficient safety distance from the edges when walking on the unit.
  - The fall protection (railing and ladder construction) must be attached to the unit by specialist staff in acc. with the manufacturer's instructions.
  - The fastening elements of the fall protection may be used only once, i.e. new fastening elements must be used for each assembly/disassembly. Tighten all setscrews applying a tightening torque of 40 Nm.
  - It is the responsibility of the operator to ensure that the ladder is secured against unauthorised climbing. Access only for persons who have permission from the operator and are appropriately trained.

2.4.1 Fins, sharp unit corners and edges

⚠ WARNING

Warns against hand injuries!
Danger of cuts to hands and fingers on the fins and on sharp edges and corners of the unit.

Use reliable hand protection!

2.4.2 Fans

⚠ WARNING

Danger of cutting off, pulling in!
There is a danger of cutting off fingers on the rotating fan blades, injury hazard for the hands and pulling in danger for loose elements such as hair, necklaces or clothing parts.
Do not operate fans without guard grille. Pinch/trap point hazard!

With automatic fan start during maintenance work there is a danger of pinching/trapping for the hands and fingers.
Power off the unit before you begin maintenance work with which you must remove the guard grille. Secure the unit against unintentional switching on again by removing the electric fuses for the unit. Secure the unit with a suitable warning sign referring to unintentional switching on.

2.5 Electrical residual hazards

⚠ WARNING

Warns against dangerous electrical voltage!
Direct and indirect contact with voltage-carrying components such as motors and electrical lines can cause serious injuries or death.
Power off the unit before performing any maintenance work. See the refrigeration system's system documentation for this. Secure the unit against unintentional switching on again by removing the electric fuses for the unit. Secure the unit with a suitable warning sign referring to unintentional switching on.
Please note that the mains cables may also be carrying voltage, even if the unit is powered off.
Work on electrical equipment may be performed only by people that have the required expertise (e.g. an electrician or an electro-technically instructed person) and who are authorised to do so by the operator.

2.6 Thermal residual hazards

2.6.1 Danger of burns

⚠ WARNING

Risk of fire and burns!
The humidification pads for the pre-cooling system are flammable if in contact with sparks, fire and high heat respectively, especially if they are dry. Burning pads can cause severe injuries and even death, and result in serious damage to property.

- Remove the pads from the unit prior to grinding, welding and hot work.
- Store the pads in a safe area for the duration of the work.

⚠ WARNING

Warns against hot surfaces!
In operation , the coil (heat exchanger) of the unit and pipes have temperatures above +45 °C. Touching can cause burns.
With refrigerant temperatures over +45 °C there is the hazard of burns on tube components and distribution tubes.
Use hand protection!

2.7 Residual hazards due to refrigerant/ammonia (NH_3)

⚠ WARNING

Danger of injuries and damage to property with ammonia as refrigerant!
The unit is operated with ammonia (NH_3) as a refrigerant. Refrigerant can cause the following hazard situations and injuries:

Explosion hazard! Fire hazard!
Ammonia is a flammable explosive gas. The fire and explosion hazard is low due to high ignition temperature, narrow ignition range, low brisance and high affinity to humidity. Leaks in the unit can cause the refrigerant NH_3 to escape into the installation area. Direct and indirect ignition sources can cause the NH_3 refrigerant to ignite and explode.

- Do not store potentially explosive and fire-risk substances in the set-up room!
- Test the tightness of the unit regularly, as specified in these operating instructions.

Provide fire fighting equipment in sufficient numbers in the unit's set-up area. Observe the details for fire fighting in the NH_3 refrigerant safety data sheet.

Chemical burn hazard!
Leaks in the unit can cause the refrigerant NH_3 to escape into the installation area. NH_3 refrigerant is corrosive in combination with humidity. Contact of the skin, mucous membranes and the eyes with the NH_3 refrigerant causes chemical burns on the skin, the mucous membranes and the eyes. If the NH_3 refrigerant comes into contact with the eyes, the eyes cannot be kept open due to strong burning, and disorientation occurs.

- Test the tightness of the unit regularly, as specified in these operating instructions.

Danger of poisoning!
Leaks in the unit can cause the refrigerant NH_3 to escape into the installation area. Ammonia is a toxic irritant gas. The refrigerant NH_3 inhaled causes agitation, dizziness, vomiting and cramps; with heavy concentrations, it can cause suffocation and life-threatening pulmonary oedema. Panic occurs. An ammonia concentration of more than 0.2 vol% in the ambient air or breathing in ambient air containing ammonia for long periods can be life-threatening or even fatal.

- Test the tightness of the unit regularly, as specified in these operating instructions.
- Ensure that the max. permissible limit values in the set-up room are not exceeded.
- Monitor the ammonia concentration in the ambient air with detectors and alarm devices.

Frostbite hazard
Leaks in the unit can cause the refrigerant NH_3 to escape into the installation area.
Liquid NH_3 refrigerant has a temperature of -33°C. Contact with the skin and eyes with liquid refrigerant causes frostbite of the eyes and skin.

- Test the tightness of the unit regularly, as specified in these operating instructions.

The employers' liability insurance association regulation BGR 500 does not make any specific requirements for refrigeration systems with ammonia for explosion protection for electrical equipment. A hazard may be expected only in an un-ventilated room of a building when the concentration with 105 grams per cubic meter exceeds the lower explosion value and high-energy ignition sources are present. Ammonia is absorbed by water. Water sprays are there-

fore used with ammonia escapes to precipitate vaporous ammonia. One cubic meter of water can bind approx. 120 kg of ammonia, depending on the temperature.

⚠ WARNING

Danger of injury, damage to property or the environment with ammonia-water combinations!

If water contacts with liquid ammonia, this can result in strong gas development and liquid ammonia splashing about.

- Never sprinkle water on liquid ammonia!
- Do not use water in the machine room to bind vaporous ammonia!
- Ensure that ammonia-water (ammonia solution) never enters water systems or sewage!

2.8 Residual hazards caused by vibrations

⚠ WARNING

Danger of injuries and damage to property caused by escaping materials

If fans are damaged during fan operation, flying parts of the fan blades can injure people or cause damage to property close to the fan.

Fans, units and pipes in the system must be designed, manufactured and integrated in such a way that risks due to vibrations generated by them or other parts of the system are reduced to the lowest possible level – using all available means to reduce vibrations, especially at the source.

NOTICE

Damage to property caused by vibrations

Vibrations that are increased by imbalances, as created by dirt or fan blade damage, are regularly caused with fan operation. The vibrations are transferred to the unit, where they can cause damage and damage the unit mounting or refrigeration system components connected to the unit.

Regularly check the fan blades and protection guards for dirt and make sure the fans run smoothly (see "Fans", page 87).

2.9 Residual hazards caused by pressurised parts

⚠ WARNING

Injury and damage to property caused by pressurised parts that contain ammonia refrigerant!

Breaks in pressurised pipes or pressurised components of the unit can cause injuries or damage to property caused by escaping materials. A sudden large release of the working fluid with its hazardous properties after a break or leak on pressurised components of the unit can cause the following hazards:

- Flammability
- Explosion hazard
- Chemical burns
- Frostbite (caused by liquid refrigerant squirting/splashing)
- Suffocation
- Panic,
- Environmental pollution

Ensure that the unit in question is pressure-free before maintenance work begins or remove the working fluid from the unit in question.

2.10 Residual hazards caused by defective installation

⚠ WARNING

Injuries and damage to property caused by defective installation!

Defective installation results in hazards caused by:

- Break or leak on liquid-carrying unit components and pipes
- Absence of release devices to prevent liquid escape: Liquid that can heat up during a refrigeration system shutdown state and cause pipes or connection flanges to break when it expands must not be locked in.
- Subcooled liquid in system sections: If system sections are opened with repairs and the pressure is balanced with the atmosphere, there is a danger that liquid, subcooled ammonia will still be in the opened area. Ammonia has a very high evaporation heat, so that the heat penetration in the pipes, for example, which are laid with a “fluid sack”, is not sufficient to evaporate the liquid ammonia quickly – especially if this is an insulated line.
- Uneven load distribution on the fixtures with the danger of stresses within the unit or unit displacement (breaks or leaks on fluid-carrying components of the unit and pipes; danger of breaking off).
- Insufficient securing of working fluid-carrying lines against mechanical damage! On-site connections: loaded installation; effect of forces on the distribution and header pipes with the danger of breaks or leaks on fluid-carrying components of the unit and pipes; danger of breaking off!
- Break-off and fall danger of the unit with hazard of escaping working fluid and exposed electrical cables.
- Break-off danger of the unit with hazard of escaping working fluid and exposed electrical cables.
- Danger of damage caused by environment-conditional hazard sources (production, transport and other processes at the set-up point).
- Unit functional faults caused by air inlet/outlet obstructions.
- Obstruction of all-side inspection, checks and maintenance, i.e. no unobstructed accessibility to the working fluid-carrying and electrical components, connections and cables, no recognisable identifiers on the pipes and insufficient space for tests.

Ensure that:

- The units are to be installed on the fixing points corresponding with their weights and tightened with fixing bolts. The operator or installer is responsible for ensuring that the bolted connections are of an adequate strength.
- The diameters of the mounting holes have been statically determined by the manufacturer and the fixing bolts are adapted accordingly.
- The fixing bolts are secured against loosening by means of an appropriate locking device.
- The fixing bolts are not overtightened or stripped.
- All fixing bolts are tightened equally to achieve a load distribution on the connections that is as balanced as possible.
- All fixing points maintain the same spacing to the fixing level permanently and under load, so that no mechanical stress occurs in the unit structure. The units are anchored in their fixing position in order to prevent the equipment from moving.
- The functional safety of the fixing bolts is tested as part of the maintenance periods. see "Maintenance", page 84,
- The unit is fixed and set up so that it is not damaged by environment-conditional hazard sources (production, transport and other processes at the set-up point) or its functioning is not disturbed by the interventions of unauthorised persons.

- The units are fixed and set up so that unobstructed air inlet/outlet is constantly available without any air short circuiting.
- The units are fixed so that they can be inspected, checked and maintained from all sides at all times, i.e. there must be unobstructed access to the refrigerant-carrying and electrical components, connections and lines, the pipeline labelling must be identifiable and adequate space must be available for testing.
- The working fluid-carrying lines must be protected against mechanical damage. On-site connections: when installing keep the unit free of load; force must not be exerted on the distribution and header pipes.
- The following must be observed without fail when installing the unit:
  - It is vital to maintain proper spacing from objects that could be endangered by an explosion or the toxic effect of NH_3.
  - Provision of measures to safeguard protective objects from an NH_3 concentration of more than 200 ppm.
  - Easily flammable materials must not be placed below the unit.
  - Set up and fix units as follows: In areas that are used for inner-plant traffic, the pipelines to and from the unit must be installed only with connections and fittings that cannot be removed.
  - Release devices to prevent liquid escapes must be provided and available.
  - Subcooled liquid may be present in only the lowest possible amount in system sections in shutdown state – minimized number of “fluid sacks”.
  - That when switching over a duty pump to a reserve pump no liquid, cold refrigerant remains in the pump.

2.11 Residual hazards with break during operation

⚠ WARNING

Injuries and damage to property caused by break during operation!

- Incorrect installation (see "Residual hazards caused by defective installation", page 32),
- Failure to observe the maximum permissible operating pressure (see "Operating conditions", page 22)
- Failure to observe pressurised pipe sections during maintenance (see "Residual hazards caused by pressurised parts", page 31),
- Failure to observe the residual risks due to vibrations (see "Residual hazards caused by vibrations", page 30)

result in ruptures during operation and maintenance. This results in dangers caused by

- ejected materials (see "Residual hazards caused by pressurised parts", page 31),
- released working fluid (see "Residual hazards due to refrigerant/ammonia (NH_3)", page 29)

Ensure that:

- The installation is fault-free.
- The maximum permissible operating pressure is always adhered to.
- Pressurised line sections are de-pressurised before all maintenance and repair work.
- Vibrations, both from the refrigerating plant (vibrations caused by compressors, units and pipes of the plant as a whole) and from the fan (imbalances due to accumulation of dirt and damage) must be reduced to the lowest possible level using all available means.
- Release devices to prevent liquid escapes are provided and available.
- Undercooled liquid is only present in the lowest possible amount in system sections in shutdown state – minimized number of “fluid sacks”.
- When switching over a duty pump to a reserve pump no liquid, cold refrigerant remains in the pump.

2.12 Residual risks due to ejected parts and liquids

⚠ WARNING

Personal injury and damage to property caused by ejected parts and liquids!

Residual risks due to ejected parts and liquids (see "Residual hazards with break during operation", page 34).

2.13 Residual hazards with disposal

⚠ WARNING

Danger of injuries and damage to property caused by working fluid ammonia NH_3!

The following notes are recommendations for the proper professional disposal of the unit. Applicable waste disposal laws are binding for the country of operation:

- Disposal must only be carried out by experts.
- All unit components, e.g. working fluids, refrigerator oil,heat exchangers, fans,must be disposed of properly as specified.
- Used working fluid that is not determined for reuse, must be treated as waste and safely disposed of. There must be no emissions into the environment.
- The NH_3 refrigerant must be filled into a special refrigerant container in compliance with the respective safety measures. This special refrigerant container must be suitable for the NH_3 refrigerant. It must be easy to identify and labelled for the refrigerant, e.g. “NH_3 (ammonia) recovered”.
- A disposable single-use container must not be used, as refrigerant vapour residues in the container escape during disposal.
- The working liquid receiver must not be overfilled. The maximum permissible pressure of the working fluid container must not be exceeded during the work process.
- The working fluid must not be filled in a liquid container that contains another or an unknown working fluid. This other or unknown working fluid must not be released into the atmosphere, but rather identified, treated again, or properly disposed of as specified.
- An officially authorised facility can be used for destroying the working fluid.
- Used refrigerator oil that has been recovered from the unit and cannot be treated again, must be kept in a separate, suitable container, treated as waste and safely disposed of.
- It must be ensured that all unit components containing working fluids and refrigerator oilare disposed of properly as specified.
- The unit is made primarily of the basic materials aluminium, steel, galvanized steel (casing), copper, polyamides (electrical components), stainless steel, insulating material, (heating rods for electric defrosting, option, accessories at the customer’s request). These materials can be handled by the waste industry, even in paint-treated state, and recycled via mechanical and thermal separation.
- Before scrapping the working fluid-carrying unit components must be drained, whereby the pressure must be reduced to at least 0.6 bar absolute for a unit pipe volume up to and including 200 l, and to 0.3 bar absolute for a unit pipe volume over 200 l. The pressure reduction process is then ended when the pressure no longer increases and remains constant, and the unit is at ambient temperature.

⚠ WARNING

Danger of environmental pollution!

The ammonia (NH_3) refrigerant is classified in acc. with the “Catalogue of Substances Hazardous to Waters” as water hazard class 2.

Escaping ammonia can enter the environment wind-born. Ammonia is lighter than air and rises quickly. It is diluted with the air to harmless concentrations. But even if the concentration is harmless, the ammonia smell is still irritating. Ammonia's classification as “toxic” means that people in the area will be concerned.

- Ensure that no working fluid enters water systems or sewage.
- With serious ammonia escapes into the waste water system, for example when ammonia vapour is broken down by water: immediately report the incident to the responsible office for the local waste water system.
- Operate the facility for recovering or disposing of working fluids so that the danger of a working fluid or refrigerator oil emission into the environment is kept as low as possible.

Güntner GmbH & Co. KG's transport packaging is made from environmentally compatible material and is suitable for recycling.

3 Technical data

3.1 Heat exchanger (typical values)

NOTICE
The typical values given here refer to standard types of this series. The following is valid especially for special equipment: Please observe the data in the calculation (Annex) and on the nameplate.

NOTICE
The capacity values of the fans depend on the ambient temperature and the air resistance at the place of installation. All electrical parts must be installed in accordance with EN standards.

Project number	See order documents
Unit name	See order documents
Manufacturer number	See order documents
Production year	See order documents
Working fluid	R 717 (ammonia, NH_3)
Volume	See order documents
Maximum permissible pressure (PS)	0 – 32 bar
Test pressure	35.2 bar
Permissible air humidity	> 100%
Test date	See order documents
Test medium	Dry air
Airborne noise emitted	See applicable offer document. In acc. with the standard procedure for measuring the sound pressure levels referred to in EN 13487; Annex C (normative).
Weight	See order documents

3.2 Fans

The AGVD fans used can be speed-controlled with Güntnercontrol units. Rotating current fans can generally be operated with 2 different speeds due to D-S changeover. There are 5sound levels (N, M, L, S, E)available.

The fans' technical delivery conditions comply with DIN 24166, accuracy class 2.

Fan type	See order-related documents
Current type	Rotating oralternating current
Voltage	400 V 3~ 50 Hz or 230 V 1~ 50 Hz
Voltage	400 V 3 ~ 50 Hz
Balancing quality	Q 6.3 in acc. with VDI 2060
Permissible air temperature	Operating range: at least -30°C to +55 °C
Protective devices	• Thermal: Thermo-contacts (break contact) • Mechanical: Protective contact grille in acc. with EN 294
Protective devices	• Thermal: Thermo-contacts (temperature monitor for safeguarding against thermal overload). • Mechanical: Protective contact grille in acc. with EN 294

4 Set-up and function

The condenser consists of

- a coil consisting of pipe coils with fins, (stainless steel tube; aluminium fin)Inlet and outlet headers (stainless steel) and tube connections to the piping,
- a casing made of galvanized sheet steel, painted in RAL 7035, light grey.
- and – depending on the version – one or more axial fans. Two fan versions are possible here: normal and boosted (optional).

Condensers of the AGVD series are intended for installation in a refrigeration system. The refrigeration system is a combination of refrigerant-carrying components and fittings connected with one another, which form a closed circuit, in which the refrigerant circulates.

The refrigerant absorbs heat at a low temperature and low pressure and evaporates (evaporator-side), and at a higher temperature and higher pressure gives off the heat again and condenses itself (condenser-side). The condensers condense the refrigerant by giving off heat to the air that is moved by fans over the dry heat exchanger surface.

The refrigerant ammonia (NH_3) used is a refrigerant of group L2/B2 (see "Residual hazards due to refrigerant/ammonia (NH_3)", page 29).

Fan motor

The fan motors for the 800 mm and 1000 mm fan diameters have to be connected to a 3~ supply. Depending on the fan version, star/delta switching affects the nominal speed or the nominal voltage predetermined by the three-phase supply.

The AC fan motors can be speed-controlled with control units. The direction must be checked; if the direction is wrong, it can be changed by interchanging two phases.

Pad pre-cooling system hydroBLU (optional)

The units can be equipped with the optional pad pre-cooling system hydroBLU. The pad pre-cooling system hydroBLU works on the principle of adiabatic evaporative cooling and can be controlled with the Güntner Hydro Management GHM pad.

Fall protection

The fall protection must be attached to the unit if people are to walk on its surface. It is available as an optional extra that can be supplied as an installation kit to be mounted by customer (see section "Fall protection").

5 Fan motor

NOTICE

In the case of longer storage periods, the fans must be operated for 2 to 4 hours every month. If the unit in its installed state has not been used for a longer period of time in damp environment (e.g. outdoors), the unit must be operated once a month at full speed for at least three hours so that the bearings move and any penetrated condensate can evaporate.

NOTICE

For fans with the protection rating IP55 or higher, existing closed condensation water holes must be opened at least once every six months.

AC technology

The AC motors are protected against overheating by a thermocontact (or PTC resistor).

For motors with a thermocontact, the thermocontact must be switched in such a way that the motor cannot be started when the thermocontact is triggered. A locking mechanism is recommended to prevent unintentional restart.

Motors with a PTC resistor need an additional external trigger unit for the installed thermistors. A locking mechanism is recommended to prevent unintentional restart. The test voltage at the thermistors is not permitted to exceed 2.5 V or only current-limiting test devices are allowed to be used.

When using a star-delta connection, a corresponding delay must be considered.

For motors with direct starting and a connection value > 4.0 kW, an inrush current limitation (soft start using a thyristor) could be required.

If frequency converters are to be used for speed control, the following points must be considered for external rotor fans:

Between the frequency converter and fans, all-pole sine-wave filters must always be installed (sine wave-shaped output voltage; filter effect between phase to phase and phase to earth).

The frequency converters from Güntner GmbH & Co. KG are equipped with this function as a standard. Three-phase standard motors are suitable for direct operation with frequency converters.

Three-phase fan motors can be operated with a star-delta connection or with speed control. The direction of rotation must be checked. A change in the direction of rotation, if it is wrong, is made by interchanging two phases.

EC technology

Please inform yourself about general differences between EC and AC technology.

NOTICE
The fan motors have their own electronic power component. This power component is controlled by means of Güntner Motor Management GMM (the new designation is aicore™ air). The motors can be operated using single-phase (1~, 200 - 277 V AC, 50/60 Hz) **or** three-phase (3~, 380 - 480 V AC, 50/60 Hz) voltage rates, depending on type. When operated without GMM, the fans should be controlled with a voltage of 0 - 10 V. Refer to the connection plans or the information on the motor terminal box for details on the electrical connection.

6 Transportation and storage

6.1 Safety

⚠ WARNING

Risk of crushing due to falling objects!

It can slip and fall off the transporting device, causing serious injuries or death. Heavy impacts or vibrations can damage the unit.

Ensure that the assigned staff is trained for proper unloading.

Ensure that nobody is under the unit or near the loaded area during the transport.

Make sure the weight is evenly distributed. Make sure that the bulk of the weight is always on the fan side. Note the transport sticker (see "Other signs and notes on the unit or packaging", page 16).

Crane and forklift transport: Ensure that there is no snow on the unit and no wind.

Secure the unit against slipping and mechanical damage.

When transporting by crane: Attach the hooks and shackles of the load handling devices only to the points provided by the manufacturer, i.e. to the factory-mounted crane lugs. Ensure that the unit casing is not compressed by straps.

Use transport devices if necessary. Use a transport device that is suitable for the weight of the unit. For the weight of the unit, refer to the order documents (see "Set-up and other applicable documents", page 8). Do not use connection pieces and outlet headers as attachment points for lifting, pulling, fixing and climbing. This can result in leaks and subsequently leakage.

Transport the unit carefully. Particularly avoid setting the unit down hard.

Only step on to the units with firm, tough and safe footwear, and only when required.

If the units do not have any railings, only walk on them with a safety harness that prevents falling.

6.2 Transportation and storage

NOTICE

Read and observe all transport signs on the units' packaging!

Prolonged mechanical stresses caused by uneven road surfaces and potholes and vibrations during transport by ship can cause transportation damage. Before transportation by sea or in countries with difficult transport routes, attachment parts that are likely to vibrate – in particular fans and base stands – must be removed for transportation.

After transport and installation of the unit, check all parts of the unit for damage. Seal any damage properly with varnish to ensure corrosion protection. This applies in particular to crane lugs and cross struts on the unit frame for transport with industrial trucks.

- Transport the packed unit with suitable transport equipment (e.g. industrial truck with forks, crane) to the final place of installation.
- Unload the unit.

⚠ WARNING

Danger of damage to goods by falling when transporting by fork-lift!

Packed units that are not lifted with forks of appropriate length could slip and fall.

- You must use a industrial truck with forks to lift the packaged unit. The load must be as close as possible to the back of the forks and the forks must be long enough so that the pallet rests completely on the forks in width. Pay attention to the positioning information for the industrial truck with forks.

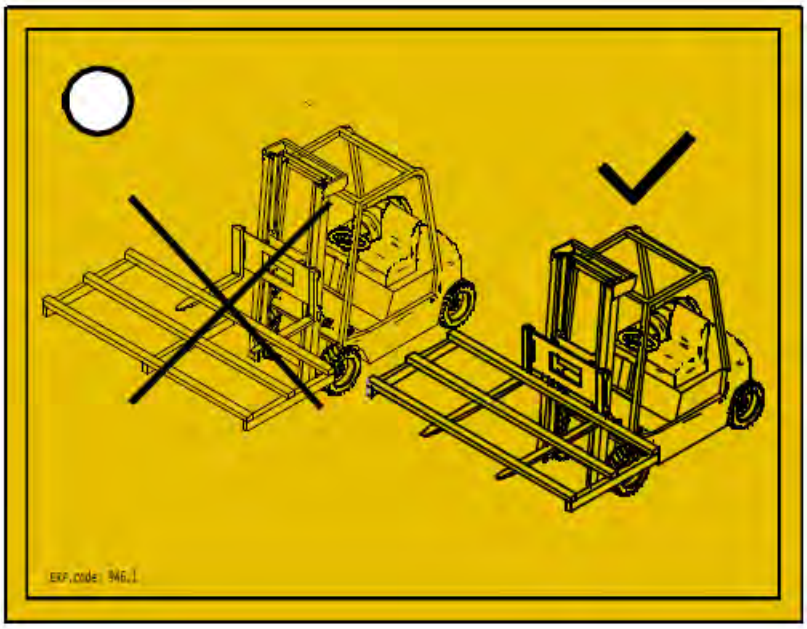

NOTICE

When moving the unit with industrial trucks with forks, ensure that the unit is fully supported on the forks. To prevent paint damage to the unit, prepare the forks of the industrial truck adequately before lifting (e.g. by placing rubberised pads on them). During transport with industrial trucks with forks, avoid impact loads due to uneven surfaces and jerky starting and braking.

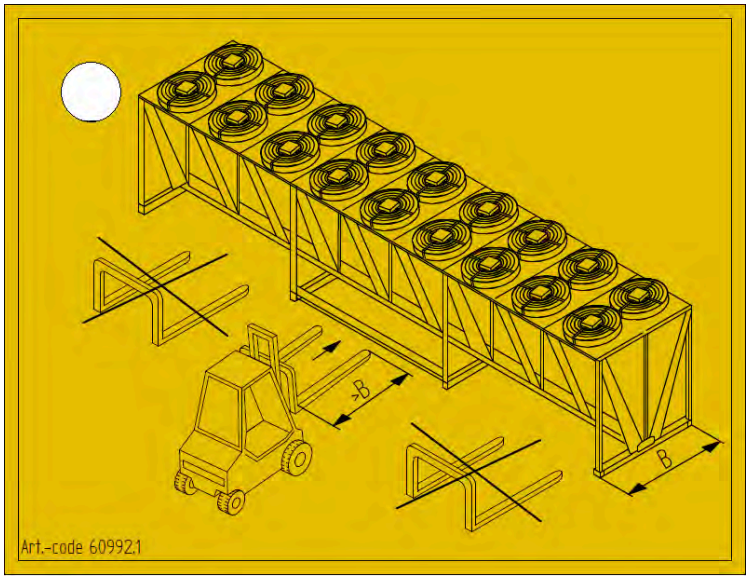

WARNING

Danger of damage to goods by falling when transporting by crane!

If transporting with a crane using an angle that is too large between the transport cables, excess mechanical stress can be exerted on the crane lugs, which could break in extreme cases and cause the unit to fall.

When transporting by crane, ensure that the angle between the transport cables is no greater than 60 degrees.

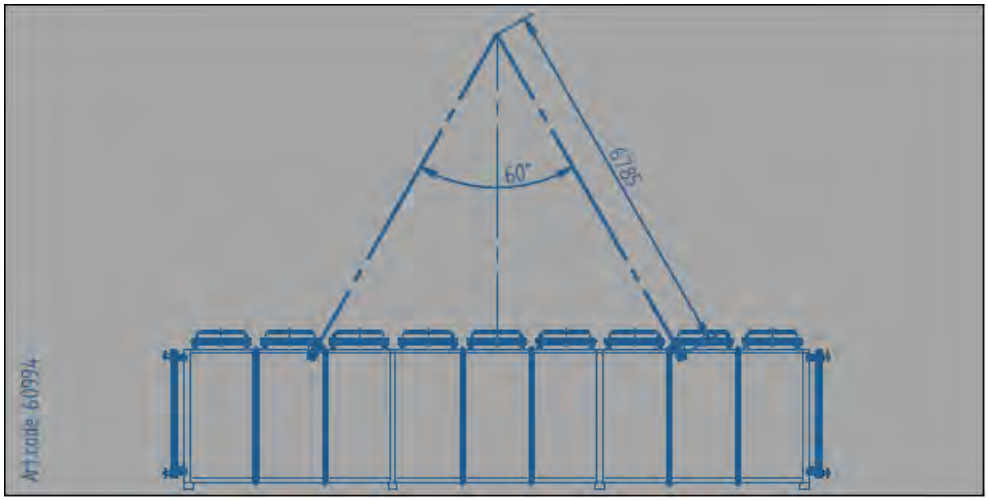

6.2.1 Transport and storage of humidification pads

The delivery consists of individual packages. The individual modules are pre-assembled ex works (one module per fan). If the delivery is not intended for direct installation, store it in a protected and dry place until installation.

Depending on the size of the packages, provide a suitable means of transport for transporting them to the installation site or carry the packages in pairs.

If you do not install the humidification system immediately, leave the packages packed and store them in a dry place where they are protected from damage and moisture.

6.3 Storage before installation

NOTICE

Danger of corrosion and dirt build-up!

The refrigerant ammonia is highly hygroscopic, i.e. it attracts moisture. Moisture and dirt must not enter the unit.

- Protect the unit against dust, dirt, moisture and wetness, damage and other harmful influences. Harmful influences: see "Safety instructions for set-up and start-up", page 46
- Do not store the unit for longer than necessary. Only store the units in their original packaging until installation. Always only place packaging units of the same size on top of one another.

- Store the unit at a protected place free of dust, dirt, moisture and damage-free until its set-up (well-ventilated halls or roofed storage site).
- If the unit set-up is delayed with regard to the planned installation time: protect the unit against weather and other harmful effects and dirt and other contaminants with an appropriate cover. The unit must also be well-ventilated here.

7 Set-up and start-up

7.1 Safety

7.1.1 Safety instructions for set-up and start-up

⚠ WARNING

Risk of damage to property!

To prevent damage to the heat exchangers, always connect them without force and torque. There must be no forces or moments acting on the heat exchanger at any time. Failure to observe this can result in leaks and further damage to the heat exchanger in the short and medium term.

Ensure that the outlet headers and flanges are not used as a climbing aid, e.g. during installation. They are not designed for external forces.

Ensure that no forces or moments act on the heat exchanger at any time by using suitable fixed bearings during pipe installation.

⚠ WARNING

Danger of injuries and damage to property with escaping ammonia refrigerant!

In case of improper installation, there is a risk of working fluid escaping during operation of the plant, which can result in personal injury and damage to property (see "Residual hazards due to refrigerant/ammonia (NH_3)", page 29)

Follow the set-up instructions in this chapter precisely and apply extreme care!

ATTENTION

Risk of damage to property!

In order to avoid stray currents, heat exchanger tubes, casing parts and the like must not be used as return line when performing welding work as these load-bearing components and lifting accessories are not designed for high welding currents.

If not observed, unintended or improper current flow can damage heat exchanger pipes of the unit and lead to damage during operation.

Securely connect the insulated welding return line to the workpiece to be welded or to the pipe holder (header) directly at the welding point.

NOTICE

Danger of damage to the system!

Foreign materials and contaminants in the working fluid circuit can impair the effectiveness or damage system components. Particularly harmful contaminants are:

- Moisture,
- Atmospheric air
- Welding residues
- Rust
- Soot/ash/cinders
- Metal cuttings
- Unstable oils
- Dust and dirt of all kinds

Moisture in the working fluid-carrying components of the unit can result in:

- Water separation and ice formation cause faults in the switching and control fittings of the refrigeration system
- Acidification
- Ageing and decomposition of the lubricating oil for refrigerating compressors,
- corrosion.

Atmospheric air and other non-condensable gases can have the following consequences:

- Refrigerator oil oxidation
- Chemical reactions between working fluid and lubricating oil for refrigerating compressors,
- Increased condensing pressure in the system

Chemical reactions between working fluid and refrigerator oil with the absence of moisture or atmospheric air with ageing and working fluid and refrigerator oil decay can have the following consequences:

- Formation of organic and inorganic acids
- Increased compressed gas temperature in the system
- Corrosion
- Bad lubrication, increased wear and tear throughout the system or failure

Other contaminants can cause:

- Accelerated chemical processes (decomposition)
- Mechanical and electrical faults in the refrigeration system

During installation (connection of the working fluid-carrying components to the working fluid-carrying system of the plant), make absolutely sure that no dirt gets inside.

Perform the installation with extreme cleanliness.

Finish all local pipe installation work before releasing the transport excess pressure!

Do not release the transport excess pressure until immediately prior to mounting.

Only remove the sealing caps on the distribution and header pipe immediately before installation.

NOTICE

Danger of corrosion and dirt build-up!

The refrigerant ammonia is highly hygroscopic, i.e. it attracts moisture. Moisture and dirt must not enter the unit. If moisture and dirt enter the unit, there is also a risk of damage to fittings and other components of the plant.

Protect the unit against dust, contamination, moisture and wetness, damage and other harmful influences. Harmful influences are, for example:

- Mechanical: Damages caused by impacts, objects falling on or against, collisions with transport equipment, etc.
- Physical: Damages caused by close by concentrated flammable gases
- Chemical: Damages caused by contaminated atmospheres (salt, acid, chlorine, sulpher-containing, or similar)
- Thermal: Damages caused by close-by heat sources

Begin with the installation as soon as possible.

⚠ WARNING

The electrical installation may be performed only by electricians (or by expert technicians with appropriate qualifications) in compliance with the relevant VDE rules (or applicable national and international regulations) and the TCC of the EPCs!

7.1.2 System-side safety requirements

The unit is a component a system and can only be operated in conjunction with the system .

- All equipment required for operating the unit must be integrated into the switching and activation equipment (complete system) :
  - Electrics: Fans and other electrical components
  - Working fluids: valves and fittings
- The working fluid-side and electrical connections must be available on the system. The connections must be specified in the order-related documents.
- The power supply of the fans must be provided in acc. with the specifications on the type plate on the fan motors.
- A switch-off device for preventing unexpected start-up (repairs switch), which separates all active conductors from the power supply (all-pole switch-off), must be provided for the fans in acc. with EN 60204-1.
- The fans' switch-on/off device must be secured (e.g. with a padlock) to prevent uncontrolled fan start-up.
- The electrical motor, repairs switch, terminal box and switching cabinet connections must be provided in acc. with the respective connection diagrams.
- It must be possible to shut off the unit if a leak occurs.
- All security-relevant shut-off valves must be operable by persons wearing self-contained breathing apparatuses and full protective suits.
- It must be possible to activate all devices meant for diverting escaping working fluids from a safe position.

7.1.3 Customer-side safety precautions

⚠ WARNING

Danger of injuries and damage to property!
The unit contains the ammonia refrigerant (see "Residual hazards due to refrigerant/ammonia (NH_3)", page 29). Ammonia is an explosive and flammable substance. Ammonia is a toxic irritant gas. An ammonia concentration of more than 0.2 vol% in the ambient air or breathing in ambient air containing ammonia for long periods can be life-threatening or even fatal.
Comply with the requirements of EN 378-3 for refrigerants, filling weight and cold transfer systems.
Install the unit in accordance with EN 378-1 only in the commissioned configuration and only in a set-up room that the unit manufacturer has configured the unit for.
Install the unit in accordance with EN 378-3, section 5 in a special machine room if an explosion or ammonia concentration of more than 200 ppm could endanger the work environment. Take effective protective precautions if such a spatial separation were to be required, but is not possible.
Install the electrical equipment (for the fan drive, for ventilation, for lighting and the alarm system) in the installation room, taking into account the condensation of humidity, the dripping water formation and the level of risk of ammonia (NH_3) in accordance with EN 378-3; section 6.
Arrange ammonia detectors and alarm systems to warn of explosion or fire dangers and ammonia concentrations that are hazardous to health and for control purposes in the unit set-up room in accordance with EN 378-3; section 7.
Ensure that the device in the set-up room is not exposed to any inadmissible high temperature effects. Effectively protect the unit against heat sources or temporary high temperatures.

⚠ WARNING

Danger of environmental pollution!

The ammonia (NH_3) refrigerant is classified in accordance with the “Catalogue of Substances Hazardous to Waters” as water hazard class 2. Refrigerant must never enter water systems or sewage.

Escaping ammonia can enter the environment wind-born. Ammonia is lighter than air and rises quickly. It is diluted with the air to harmless concentrations. But even if the concentration is harmless, the ammonia smell is still irritating. Ammonia’s classification as “toxic” means that people in the area will be alarmed.

- Set up the unit so that liquid ammonia, which can escape from the unit in the event of a fault, cannot enter water systems or sewage.
- With serious ammonia escapes into the waste water system, for example when ammonia vapour is broken down by water: immediately report the incident to the responsible office for the local waste water system.
- If an ammonia puddle has formed on the floor under the unit, covering with a film (PE, for example) or synthetic medium expansion foam (fire department) can cut off almost all the heat dissipation to this liquid and therefore the vapour formation, so that there is enough time for disposal measures.

7.2 Requirements as regards the place of installation

You will find the dimensions and weights in the order-related documents.

- Ensure that the unit is set up so that it is not damaged by environmental hazard sources (production, transport and other processes at the set-up point) and its functioning is not disturbed by the interventions of unauthorised persons.
- Position the unit so that it cannot be damaged by internal traffic or transport processes.
- Enable optimum unit control and accessibility:
  - Place the unit so that it can be monitored and controlled from all sides at all times.
  - Ensure that sufficient space is provided for maintenance.
  - Ensure that all fluid-carrying components, connections and lines and all electrical connections and lines are easy to access.
  - Ensure that the tubes' identification is well visible.

NOTICE

Danger of rusting of the vibration dampers or unit legs!

Installation of the unit in stagnant water or on surfaces on which water can collect (such as glycol protectors) can lead to rust on vibration dampers and unit legs.

Rusting vibration dampers or unit legs cause instability of the unit.

Requirements for unobstructed air flow to the unit

Several units can be placed space-savingly in rows with high nominal capacity to cover high capacities. With double or multiple row set-ups a substructure is required to guarantee sufficient air-side pressurising.

The following requirements for the installation site refer to installations of up to 10 units with a base frame. For installations of more than 10 units, please consult the manufacturer, Güntner GmbH & Co. KG, in advance.

The installation instructions cover six different installation situations (alternatives). They differ in the air suction from different directions. The air is sucked in across the base frame and the unit in all cases.

Alternative	Air suction across			
	front sides		sides	
	front	rear	right	left
1	Yes	Yes	Yes	Yes
2	No	Yes	Yes	Yes
3	Yes	Yes	No	Yes
4	Yes	Yes	No	No
5	No	Yes	No	Yes
6	No	No	Yes	Yes

Legend for abbreviations in diagrams

A	Distance	G	Frame
AB	Cover sheet	GH	Frame height
UH	Unit height	UL	Unit length
BG	Frame width	LG	Frame length

If a number of units are installed next to each other, a minimum distance must be maintained between the units in order to reduce the airflow volume. An adequate inlet air supply across a base frame is required. The minimum distance between the units is specified in a table for each installation alternative. For individual specifications of the frame height, please contact the manufacturer.
As a rule of thumb for the frame height, you should ensure an inlet airflow ratio of ≥ 70% with compliance with the minimum distance and under the condition of an unobstructed incoming airflow from all four sides. The following points apply in this regard:

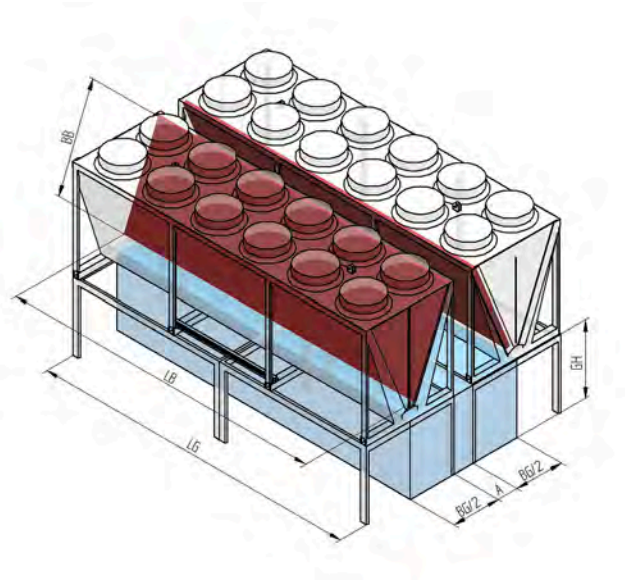

Face area and suction area

Please refer to the delivery documentation relating to the order for the dimensions of the length and height of the unit.

Face area = (LG x GH x 2) + ((2 x BG/2 x GH x 2) + (A x (GH + UH) x 2)) x (number of units – 1)

Suction area = UH x UL x 0.83 x 2 x (number of units – 1)

Inlet airflow ratio AV = face area: suction area (specification: ≥ 70 %)

NOTICE
Take into consideration any additional objects at the installation site that could obstruct the airflow. Examples of additional obstructions: walls, supports, pipes, etc.

NOTICE
It is recommended when installing a number of units to bridge the minimum distance between the units with a cover plate.

Overview of the set-up variants.

Set-up variant 1: Air intake via base frame and unit

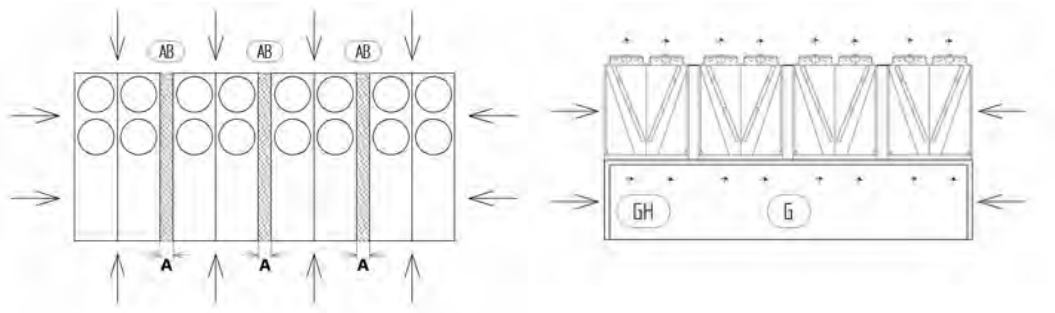

Air intake: 2 front sides and 2 sides over the entire height; up to 10 units;
Minimum distance A_{min} between two units:

	Unit							
Type	2 x 2	2 x 3	2 x 4	2 x 5	2 x 6	2 x 7	2 x 8	2 x 9
A_{min} (m) Module types A + B	0	0.05	0.1	0.15	0.2	0.25	0.3	0.35
A_{min} (m) Module types C + D	0	0.15	0.25	0.35	0.4	0.45	0.5	0.55

Set-up variant 2: Air intake via base frame and unit

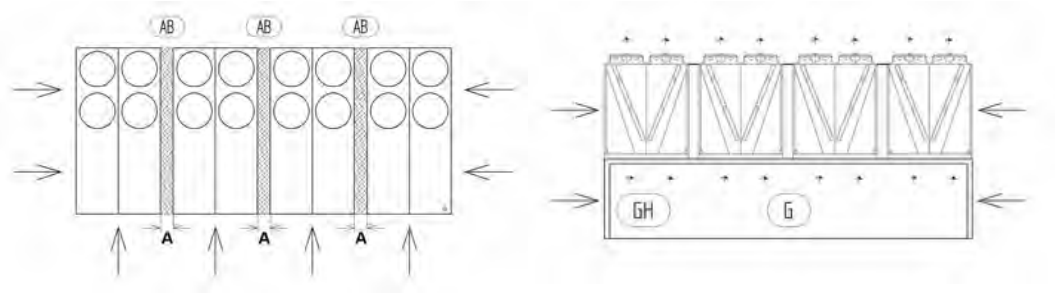

Air intake: 1 front side and 2 sides over the entire height; up to 10 units;
Minimum distance A_{min} between two units:

	Unit							
Typ.	2 x 2	2 x 3	2 x 4	2 x 5	2 x 6	2 x 7	2 x 8	2 x 9
A_{min} (m) Module types A + B	0.1	0.2	0.3	0.33	0.36	0.4	0.43	0.46
A_{min} (m) Module types C + D	0.25	0.4	0.5	0.55	0.6	0.65	0.7	0.75

Set-up variant 3: Air intake via base frame and unit

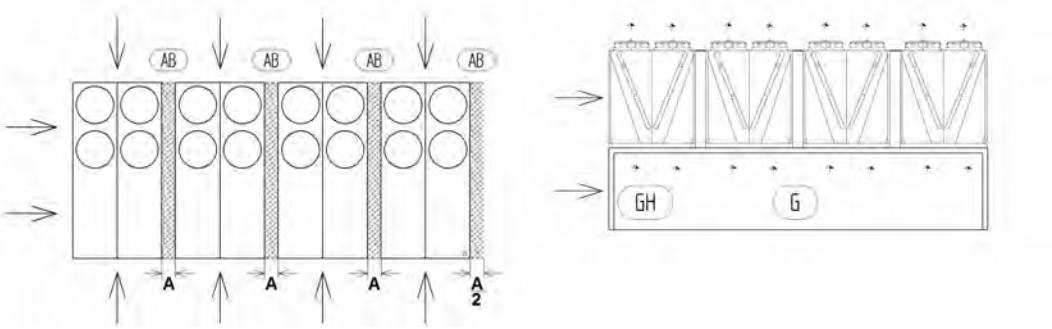

Air intake: 2 front sides and 1 side over the entire height; up to 10 units;
Minimum distance A_{min} between two units:

	Unit							
Typ.	2 x 2	2 x 3	2 x 4	2 x 5	2 x 6	2 x 7	2 x 8	2 x 9
A_{min} (m) Module types A + B	0	0.05	0.1	0.15	0.2	0.25	0.3	0.35
A_{min} (m) Module types C + D	0	0.15	0.25	0.35	0.4	0.45	0.5	0.55

Set-up variant 4: Air intake via base frame and unit

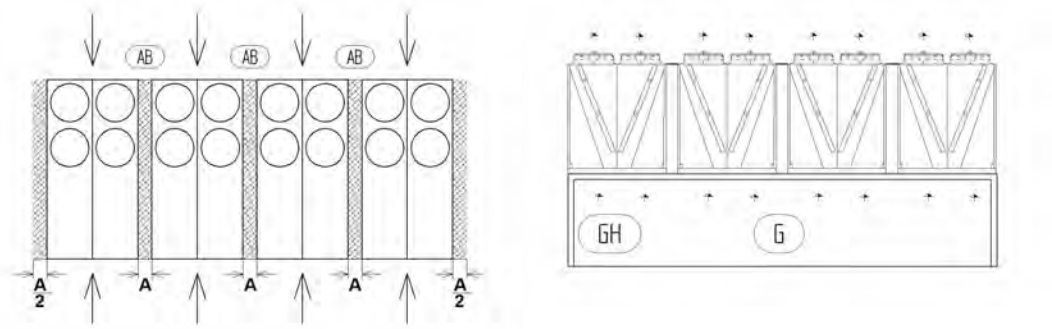

Air intake: 2 front sides over the entire height; up to 10 units;
Minimum distance A_{min} between two units:

	Unit							
Typ.	2 x 2	2 x 3	2 x 4	2 x 5	2 x 6	2 x 7	2 x 8	2 x 9
A_{min} (m) Module types A + B	0	0.05	0.1	0.15	0.2	0.25	0.3	0.35
A_{min} (m) Module types C + D	0	0.15	0.25	0.35	0.4	0.45	0.5	0.55

Set-up variant 5: Air intake via base frame and unit

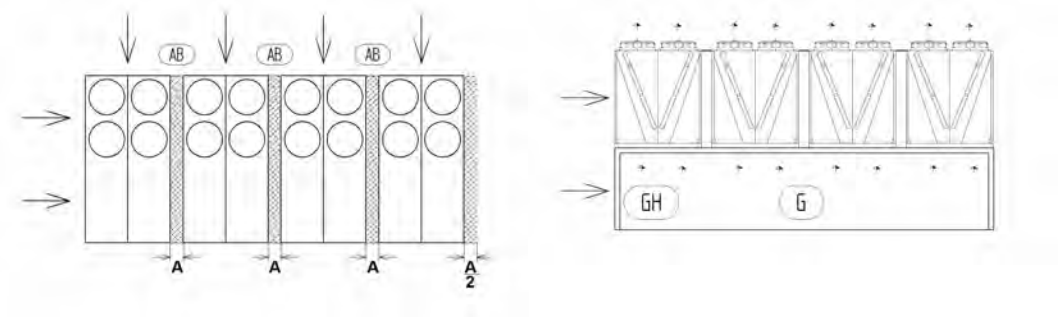

Air intake: 1 front side and 1 side over the entire height; up to 10 units;
Minimum distance A_{min} between two units:

	Unit							
Type	2 x 2	2 x 3	2 x 4	2 x 5	2 x 6	2 x 7	2 x 8	2 x 9
A_{min} (m) Module types A + B	0.1	0.2	0.3	0.33	0.36	0.4	0.43	0.46
A_{min} (m) Module types C + D	0.25	0.4	0.5	0.55	0.6	0.65	0.7	0.75

Set-up variant 6: Air intake via base frame and unit

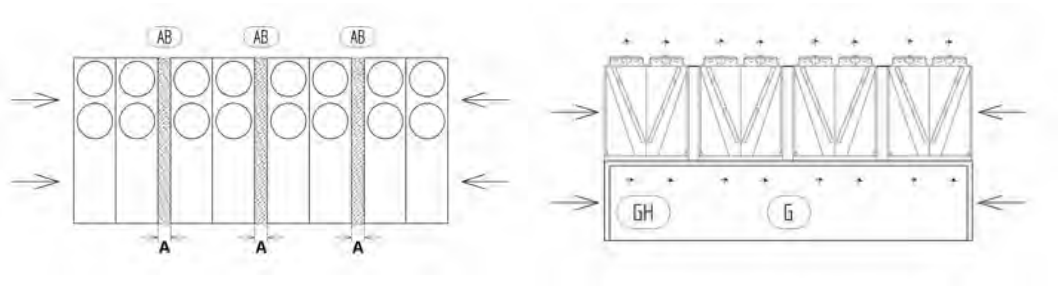

Air intake: 2 front sides over the entire height; up to 10 units;
Minimum distance A_{min} between two units:

	Unit							
Typ.	2 x 2	2 x 3	2 x 4	2 x 5	2 x 6	2 x 7	2 x 8	2 x 9
A_{min} (m) Module types A + B	0.65	0.65	0.65	0.65	0.65	0.65	0.65	0.65
A_{min} (m) Module types C + D	1	1	1	1	1	1	1	1

7.3 Unpacking the unit

Units with transport rail

- Open the container doors as wide as possible.

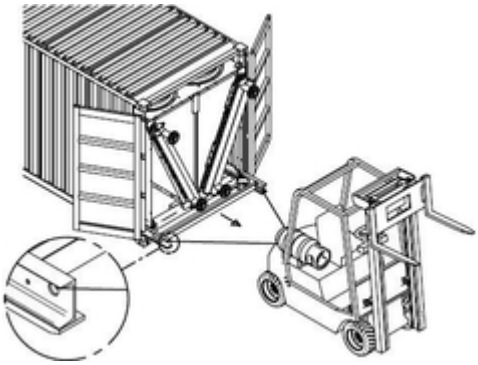

Pull-out fixing device

- To pull out the unit, attach a cable to the holes provided in the transport rail.
- Pull the unit completely out of the container.

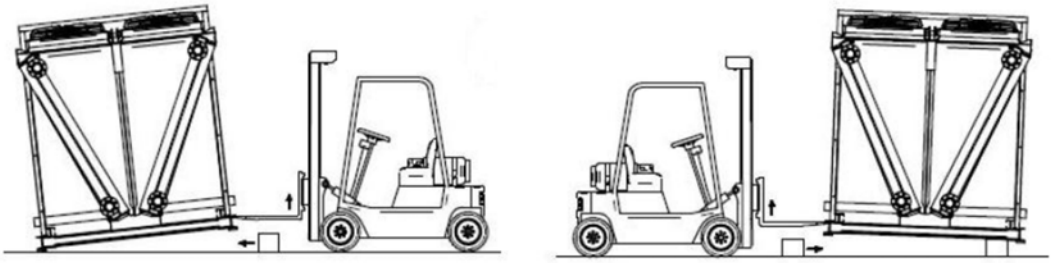

Jacking up the unit

- Lift the unit slightly on one side. To prevent paint damage to the unit, prepare the forks of the industrial truck adequately before lifting (e.g. by placing rubberised pads on them).
- Place a square timber appropriate to the weight of the unit underneath along the entire length of the unit.
- Lift the unit slightly on the other side.
- Here, too, place a square timber appropriate to the weight of the unit underneath along the entire length of the unit.

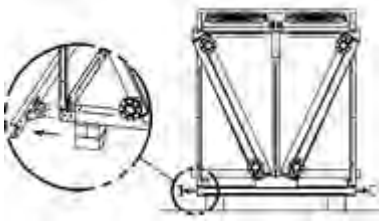

Removing the transport rail

- Remove the transport rail on both sides.

Units without transport rail

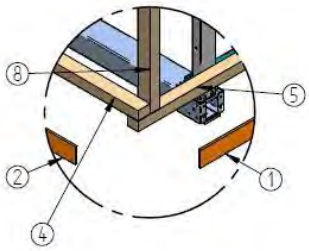

Detailed view A

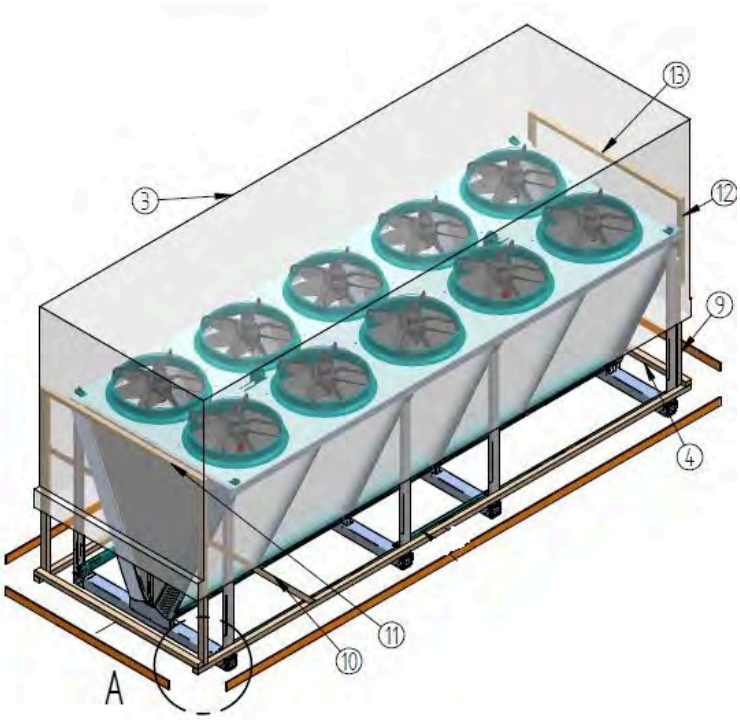

General overview “unpacking”

- Remove the outer lining boards (1, 2) on all sides.
- Remove the film (3).
- Remove the remaining lining boards (4, 5, 8, 9, 10, 11, 12, 13).
- Remove all transport safety bolts marked with special tags (see "Other signs and notes on the unit or packaging"). After removing the screws/bolts, repaint these areas to ensure corrosion protection

- Check scope of delivery for completeness. For the scope of delivery, refer to the order documents.
- State transport damages and/or missing parts on the delivery notes. Immediately notify the manufacturer in writing about the matter. Damaged fins can be repared on site using a fin comb.
- Check transport excess pressure: All units are delivered by the manufacturer with approx. 1 bar of transport excess pressure (cleaned and dehumidified air). Establish the transport excess pressure at the Schrader valve (pressure measurement). In case of unpressurised units: Immediately notify the manufacturer and note it on the delivery note. An unpressurised unit indicates a leak in the unit.

  CAUTION! Risk of personal injury and damage to property due to escaping heat carrier! An unpressurised unit indicates a leak due to transport damage. Escaping heat carrier due to leaks in the unit can cause personal injury (see "Residual hazards due to refrigerant/ammonia (NH_3)", page 29**). Do not put the unit into operation!**

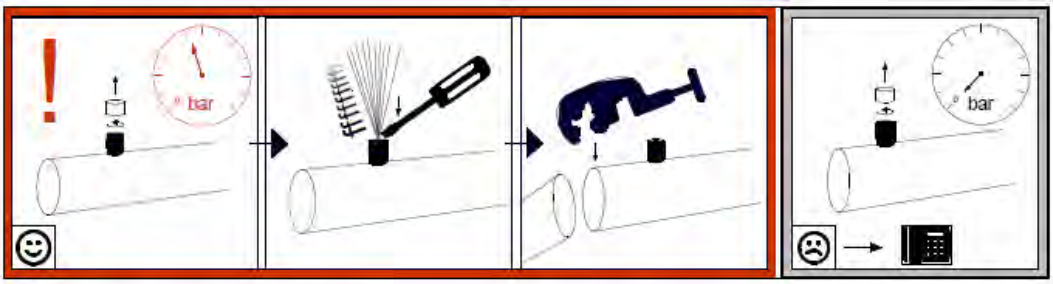

1 Unscrew the cap.
2 Check transport excess pressure: The units are delivered by the manufacturer with transport excess pressure (cleaned and dehumidified air). Release the transport excess pressure at the Schrader valve immediately prior to mounting. In case of unpressurised units: Immediately notify the manufacturer and note it on the delivery note.

NOTICE
Risk of corrosion and soiling! The refrigerant ammonia is highly hygroscopic, i.e. it attracts moisture. Moisture and dirt must not enter the unit. Protect the unit against dust, dirt, moisture and wetness, damage and other harmful influences. Harmful influences: see "Safety instructions for set-up and start-up", page 46 Begin with the installation as soon as possible.

7.4 Installation

7.4.1 System-side requirements for stress-free installation

- Prevent stresses in the unit:
  - Ensure that all fixing points have the same spacing to the fixing level.
  - Ensure that all fixing points maintain the same spacing to the fixing level under load and permanently.
- Set up and fix units as follows: Airflow must not be impaired by obstructions.
- The units must be installed on fixing points that are appropriate for the unit's weight and then bolted with fixing bolts. The operator or installer of the equipment is responsible for ensuring that the bolted connections are of an adequate strength. The following instructions must be observed when fixing the units:
  - The diameter of the mounting holes have been statically determined by the manufacturer; the fixing bolts must be adapted accordingly. When calculating the transferring bearing strength it is imperative to take into account the total weight of the unit (= structural weight + weight of pipe content + additional weight, such as water, frost, ice, dirt or similar).
  - The fixing bolts must be secured against loosening with an appropriate locking device.
  - The fixing bolts must not be overtightened or stripped.
  - All fixing bolts must be tightened equally.
- Prevent the unit from shifting in its position. Fix the unit in its position. Tighten the fixing bolts and secure then against loosening.
- Only fix the unit to the intended fixing points.

NOTICE
Observe the earthing marking on the unit. Ensure professional equipotential bonding to protect any warranty claims. After ensuring that the unit is earthed on site, all components of the earthing point must be repainted and properly sealed to ensure corrosion protection.

NOTICE
When performinhg chip-removing activities on or near the unit, such as drilling holes into the unit, grinding with an angle grinder and cutting, the unit must be protected from flying sparks and falling chips. Cover the unit during machining and clean it carefully afterwards. Remove all falling chips and repaint the unit in the reworked areas to ensure corrosion protection.

7.4.2 Mounting the vibration dampers (optional)

The optional vibration dampers are separately enclosed with the unit.

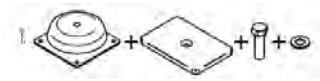

Contents of package

- Check that the list of package contents is complete.

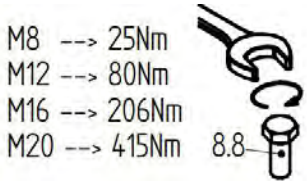

Observe the specified torque.

Order of assembly

- Assemble the individual parts in the order shown.
- After mounting the vibration dampers, repaint all fixing elements to ensure corrosion protection.

Premounted vibration dampers

Pre-mounted vibration dampers

7.4.3 Installing hydroBLU

7.4.3.1 General safety instructions for hydroBLU

⚠ WARNING

Risk of fire and burns!
The humidification pads for the pre-cooling system are flammable if in contact with sparks, fire and high heat respectively, especially if they are dry. Burning pads can cause severe injuries and even death, and result in serious damage to property.

- Remove the pads from the unit prior to grinding, welding and hot work.
- Store the pads in a safe area for the duration of the work.

⚠ CAUTION

Risk of damage to property!
Work carried out by non-experts can result in damage to the system.

- Ensure that all persons who are responsible for performing the tasks described here read and understand these instructions.

⚠ CAUTION

Risk of damage to property!
Deposits can result in reduced performance and, in the long term, to leaks.

- Ensure that the heat exchanger is leak-tight, clean and without damage and deposits before mounting the system.

⚠ CAUTION

Risk of damage to property!
Too high or too low pressure in the water supply line can result in reduced performance or damage to the pad system.

- Keep the water pressure in the water supply line within the permissible range. If necessary, use a pressure controller or limiter for this purpose.
- The pressure must be at least 2 bar and must not exceed 5 bar. If necessary, install a pressure controller or limiter for this purpose on site.
- Pressure fluctuations can damage the distribution hoses and must therefore be avoided.

⚠ CAUTION

Risk of biofilm formation due to standing water!
If the drains of the trays remain closed, standing water can occur, resulting in biofilm formation. This can cause adverse health effects.

- Ensure that the drains are not closed.
- Connect the drains to the drain line.

NOTICE

The dirt trap for the water supply line to the hydroBLU system, which protects the components against dirt and damage, must be cleaned regularly. Otherwise, the holes of the distribution hose can become clogged, resulting in reduced water distribution and reduced performance. Also the pads can become dirty more quickly, which may require earlier replacement.

NOTICE

When operating units with adiabatic pre-cooling systems such as the hydroBLU, you must observe the specifications of the 42nd BImSchV (Federal Immission Control Ordinance) or any applicable national regulations for the operation and maintenance of evaporative cooling systems.

NOTICE

The owner or operator must ensure that the persons who assemble and service the system are adequately trained and qualified.

NOTICE

The owner or operator must ensure that there is a separate supply line with shut-off and drain valve for each unit.

Parameter	Unit	Abbreviation	Value
Material in contact with water			Stainless steel, aluminium, cellulose
Appearance		-	Clear, free of deposits
Colour		-	Colourless
Odour		-	None
pH value (at 20 °C)		-	6.5 ... 8.5
Temperature	°C	T	< 20
Electrical conductivity (at 20 °C)	µS/cm	LF	< 1000
Total hardness	°d	GH	< 21
Chloride	g/m³	Cl-	< 200
Sulphate	g/m³	SO42-	< 300
Gen. colony-forming units	CFU/ml	CFU total	< 10000
Pseudomonas aeruginosa	CFU/100ml	Pseud. aer.	< 100
Legionella spp.	CFU/100ml	Legionl.	< 100

NOTICE

The warranty is rendered void if water of impermissible quality is used. The water quality must be ensured so that the humidification pad system functions optimally and the maximum time of exposure of the humidification pads is achieved.

7.4.3.2 Installation

Preparation

Required personnel:
- Qualified personnel, at least two persons

Required tools, materials:
- Socket wrench set,
- rechargeable screwdriver,
- knife,
- screwdriver,
- sealant

Procedure

- Unpack the packages and check the delivery for completeness and intactness. Report all defects to the manufacturer immediately.
- Before mounting the hydraulic module, remove all humidification pads so that they are not damaged when mounting the module (for the procedure, see "Removing the humidification pads").
- Set the humidification pads aside for later installation.
- Ensure that the humidification pads are dry when installing them.

7.4.3.2.1 Removing the humidification pads

- Push the humidification pad holding plate upwards.
- Pull the upper part of the pads towards you.
- Pull the lower part of the pads out of the bottom rail.

7.4.3.2.2 Installing the water supply

- Mount the brackets on the legs.
- Insert the lower trays and screw them to the brackets.
- Attach the side plates, and, if necessary, the intermediate plates, to the unit.

NOTICE
The lower trays and the side plates serve to prevent infiltrated air. If the humidification pads are to be set up separately, a customer solution is also possible instead of the barrier sheets supplied. In any case, the owner or operator of the system is responsible for closing the openings between the humidification system and the unit in a way that prevents infiltrated air but still lets water (e.g. rainwater or water resulting from cleaning) run off. In addition, the system must be firmly and durably fastened in all parts if the hydroBLU system is not directly attached to the unit, e.g. if the hydroBLU system is mounted at a distance from the unit. Infiltrated air (air that is not drawn in by the hydroBLU system) impairs the performance of the adiabatic pre-cooling system.

NOTICE

If there is equipment such as a temperature sensor for measuring the ambient air temperature at this part of the unit, it must be moved into position to ensure smooth operation and the intended control.

Taking the example of the ambient air or outdoor air temperature sensor mentioned above, which is connected to a Güntner GMM controller, leaving the sensor in this position would lead to a modified regulation of the fans. The outdoor air temperature would no longer be measured.

When moving the temperature sensor, ensure that it is in the shade.

- If necessary: Move equipment located in this area if it interferes with the installation of the hydroBLU system or if it would negatively affect the operation of the unit or system.
- Pull the water supply profile out for installation (explained in the picture using a 2x7 unit as an example; the procedure for other sizes may differ slightly).

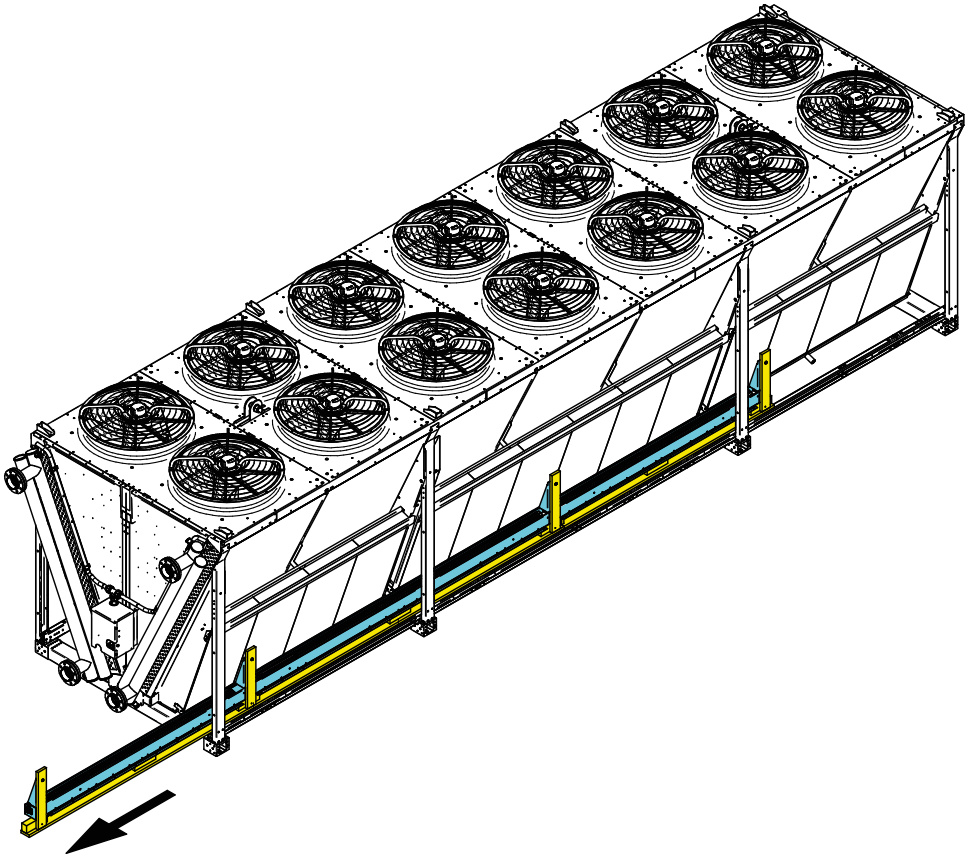

- Loosen the fixing bolts of the water supply profile and separate it from the sheet.

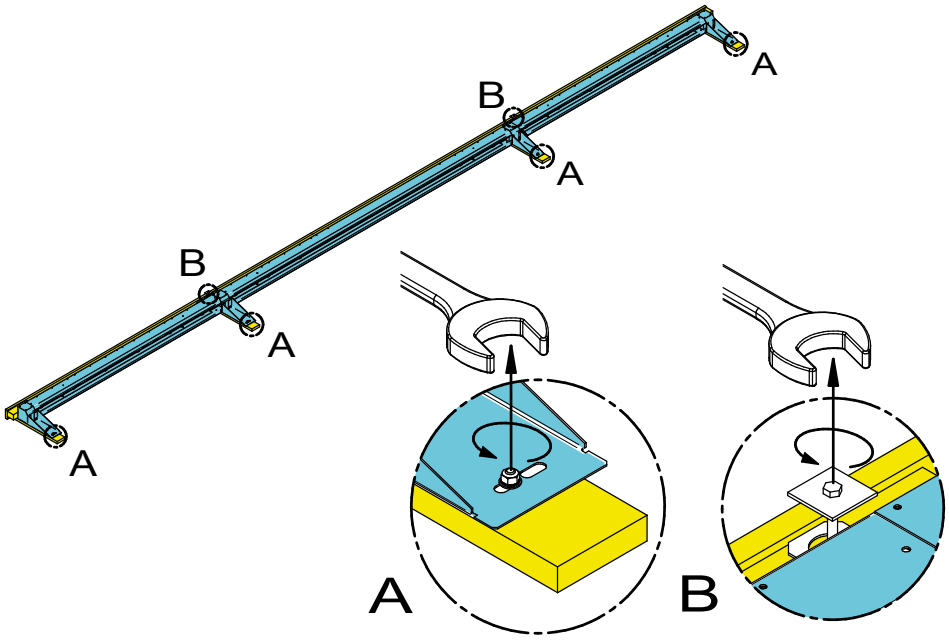

- Mount the water supply system in the upper part of the unit.

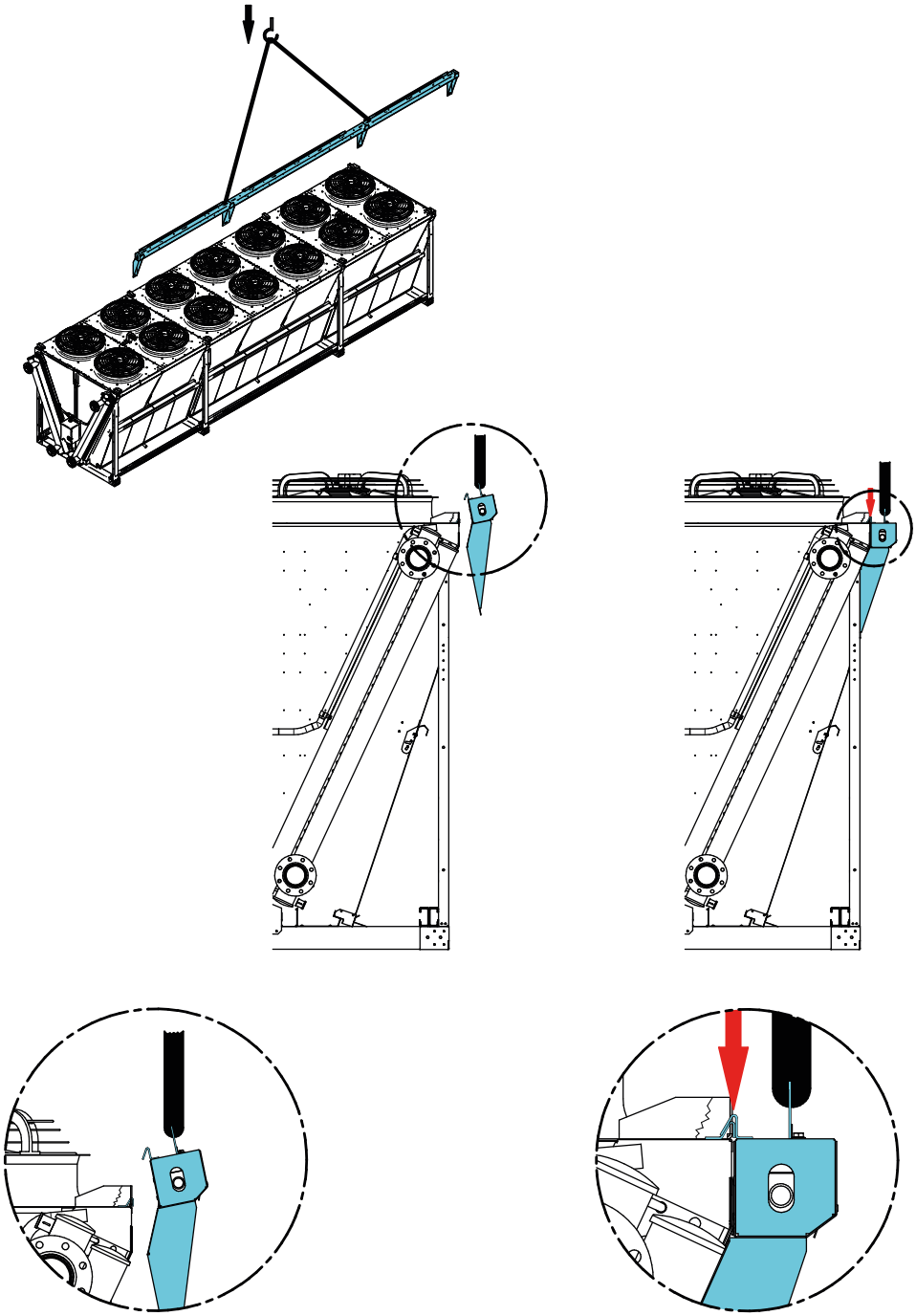

- Screw the water supply system firmly to the heat exchanger.

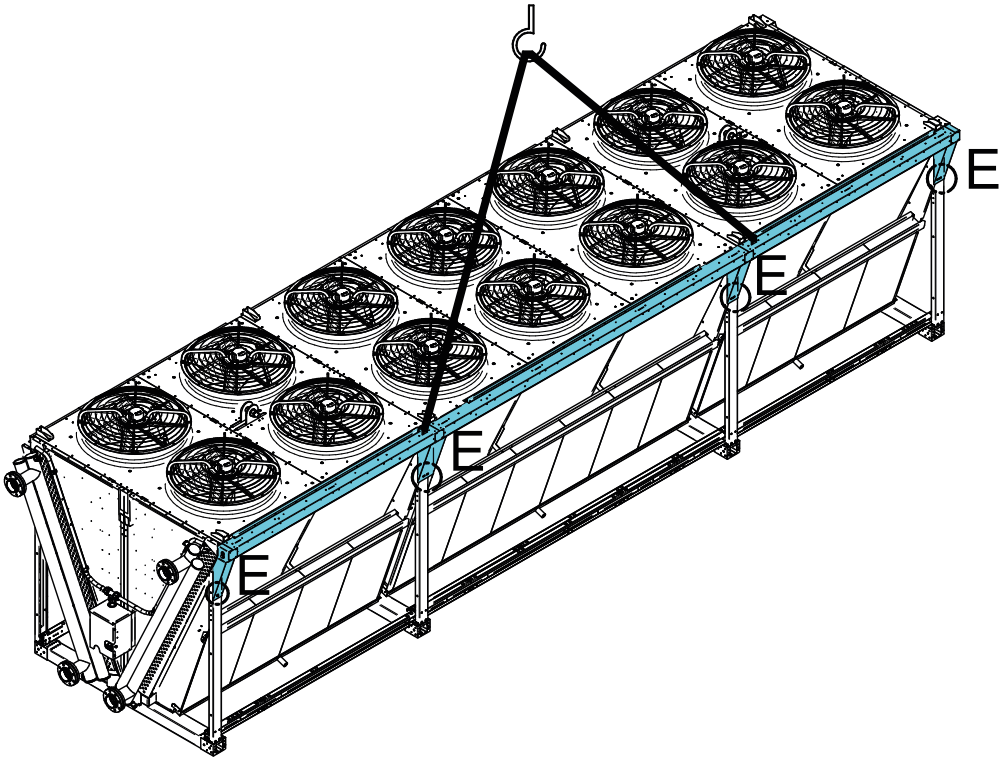

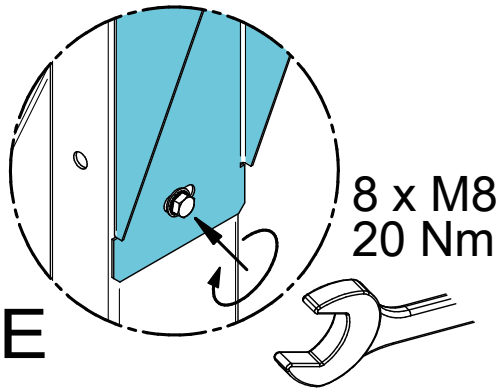

- Mount the collecting trays in the lower part of the unit.
- Mount the horizontally mounted intermediate sheets to fix the humidification pads which will later be arranged one above the other.
- Repeat this installation sequence on the second side.
- Make sure that all parts are firmly screwed together and to the unit.
- Where necessary, seal off parts of the collecting trays that are bolted together to prevent leakage.

7.4.3.2.3 Installing the distribution hoses

⚠ CAUTION

Risk of damage to property!

If the distribution hoses are handled carelessly and are pulled along sharp edges for example, they may be damaged. Ensure that the distribution hoses are not pulled along sharp edges. Ensure that the distribution hoses are handed with care.

- Insert the supplied distribution hoses into the grooves provided at the top end of the hydraulic module, lay them via the water supply profile to the end module and secure them with pipe clamps.

  NOTICE

  To ensure that the pads are evenly humidified, the hoses must neither be stretched nor sagged.

- Shorten the hoses in the end module or at the end of the water supply system as required.
- Push the hose ends onto the hose connection nozzles on the connection module and end module of the water supply system.
- Fasten the hose ends with the supplied clamps.

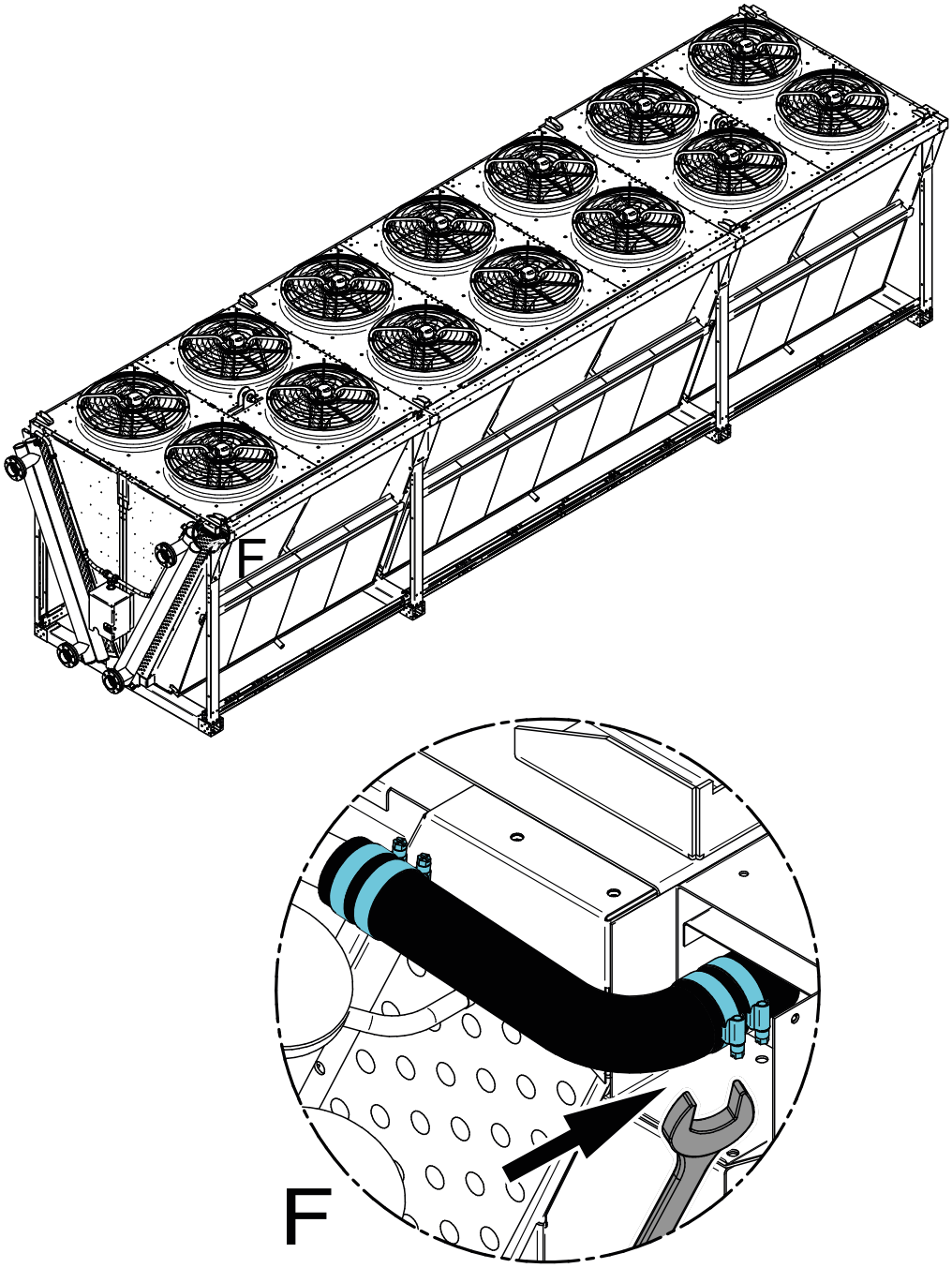

7.4.3.2.4 Installing the humidification pads

Preparation

- Ensure that the humidification pads are inserted correctly; observe the orientation of the waffle-type structure! Ensure that the humidification pads are dry when installing them.

Important note

NOTICE
Depending on the unit type and set-up of the heat exchanger or the humidification pad system, the following installation sequence must be complied with when mounting the pads: Starting from the pad close to the water connection and continuing to the last pad of the section. The pads are mounted section by section.

Procedure

Info: Two rows of humidification pads are inserted one above the other.

- Screw the height adjustment of the water supply system into the upper position to create enough space to insert the humidification pads.
- Place the humidification pad fastenings at the intermediate rail which is located between the lower and upper rows of pads in the appropriate position so that the pads can be inserted.

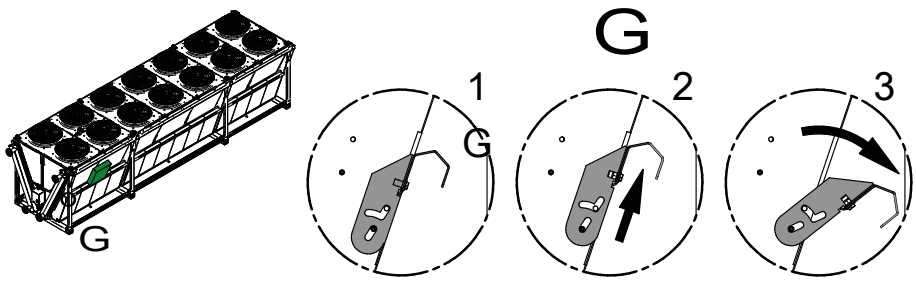

- First insert the humidification pads into the bottom row..
- Make sure that the humidification pads are properly inserted in the bottom rail or collection tray so that they do not move.
- Now insert pads into the upper part above the intermediate rail.
- Repeat the procedure for this section, cut the pads at the end of the section to the right size before inserting it (explained in the image using a 2x7 unit as an example).

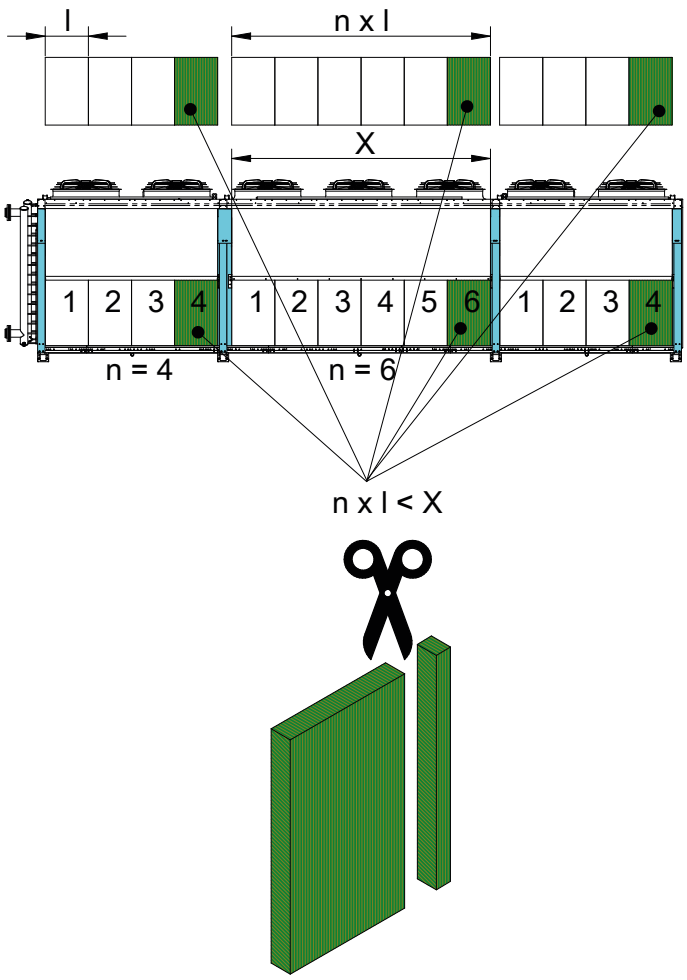

- Repeat the procedure for all sections on this side of the unit until all the pads in the bottom row are in place.
- Insert the upper row of humidification pads.
- Insert the upper part of the pads vertically from below into the water supply in the upper part of the unit.
- Fold the pads in the lower area towards the heat exchanger into the intermediate rail.

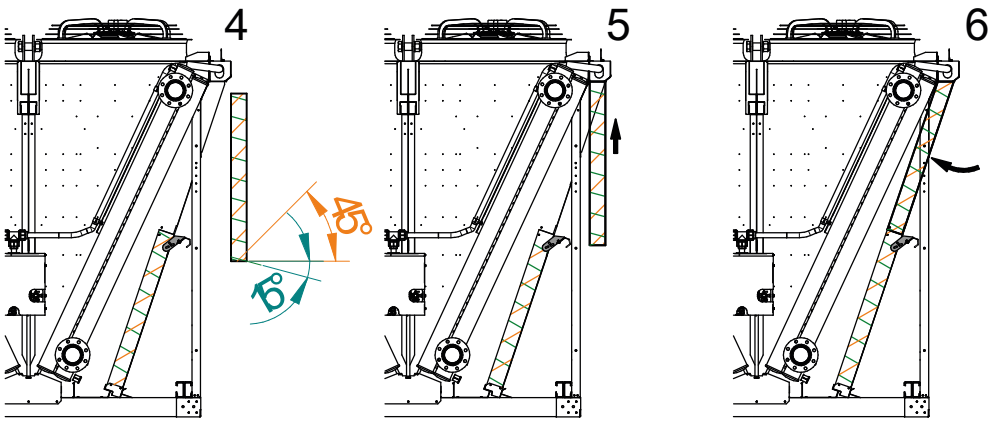

- Make sure that the humidification pads are inserted properly into the intermediate rail so that it does not move.

- Repeat the procedure for this section, cut the pads at the end of the section to the right size before inserting it.
- Place the humidification pad fixtures at the intermediate rail, which is located between the lower and upper rows of pads, in the appropriate position so that the pads are held in place.

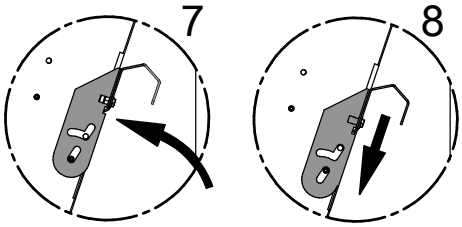

- Repeat the procedure for all sections on this side of the unit until all the pads in the top row are in place.
- Screw the height adjustment of the water supply system into the lower position so that the distribution hoses inside rest directly on the pads.

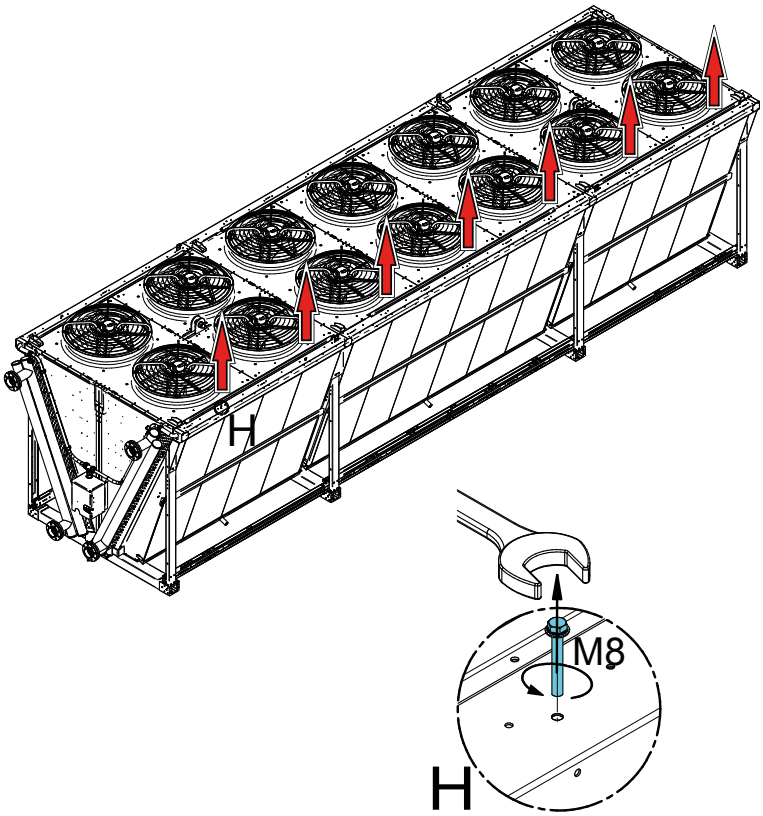

- Repeat this installation sequence on the second side.

7.4.3.2.5 Connecting the hydraulic module and the humidification pad system

Procedure

- Screw the hydraulic module tight (to the unit, a nearby wall, the substructure or to the floor close by). Select the place of installation so that the module is easily accessible and remains so during the operating time of the unit. During installation, always ensure that there is a gradient of at least 3% from the pad system to the hydraulic module to ensure that the system can be drained without any problems. The hoses must not sag, the water must be able to flow out of the hoses without any problems.
- Route the tubing of the water supply system from the connections on the pads to the hydraulic module. The connections for inlet and outlet are marked with adhesive labels.
  Make sure that the hoses are routed in such a way that they are not damaged by external influences over the operating life of the system, e.g. the hoses must not touch hot pipes or similar. Also avoid places where the hoses can be damaged by rubbing, or place a suitable protection or cover between the hoses and the respective area.
  In addition, if the electrical module is also attached to the unit, make sure that the hoses are not routed in this location to keep the installation site clear and to ensure access to the control cabinet.
- Connect the water supply line to the hydraulic module. Take into account draining the water supply line to avoid frost damage.
- Connect the drain line of the automatic drainage of the hydroBLU system.
- Connect the drain line of the collecting trays below the pads.

NOTICE

The temperature sensor included in the set is mounted on a module including insulation and sun protection. If you want to mount the temperature sensor somewhere else, make sure that it is protected from direct sunlight.

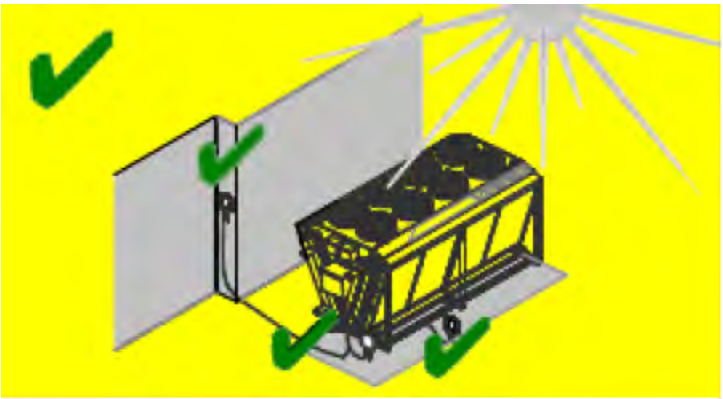

7.4.3.2.6 Connecting the electrical module

Safety

⚠ DANGER

Risk of injuries owing to electrical voltage!
Direct and indirect contact with live cables can cause serious injuries or death.

- Have the work carried out only by a qualified electrician.
- Work should be carried out in accordance with local regulations, e.g. DIN VDE 0105/EN 50110.

Procedure

- Screw the electrical module tight (to the unit, the wall, the substructure or to the floor).
- Wire the electrical module between the switch cabinet and the main supply line in accordance with the wiring diagram.
- Perform the fuse rating according to the wiring diagram.
- Connect the Güntner controller or the external fan control unit to the switch cabinet according to the wiring diagram (-> see connection scenarios in the wiring diagram).
- Connect the hydraulic module to the control cabinet.
- If required, connect further external signals to the switch cabinet or the Güntner controller (e.g. release, drainage, monitoring signals).

7.5 Notes on connecting the unit

⚠ WARNING

Danger of injuries and damage to property with escaping ammonia refrigerant!

In case of improper installation, there is a risk of working fluid escaping during operation of the plant, which can result in personal injury and damage to property (see "Residual hazards due to refrigerant/ammonia (NH_3)", page 29).

Prevent working fluid from escaping from the unit into the environment.

- Secure all working fluid-carrying lines against mechanical damage.
- In areas that are used for internal traffic, only lay the pipelines to and from the unit with connections and fittings that cannot be removed.

Ensure that the on-site connections do not exercise any forces upon the distribution and header points. This can cause leaks on the working fluid connection points of the unit and on connection points of the on-site pipe-laying.

Ensure that:

- Release devices to prevent liquid escapes are provided and available.
- During system standstill periods, undercooled liquid is only present in the lowest possible amount in system components by minimising the number of dead end traps.
- When switching over a duty pump to a reserve pump no liquid, cold working fluid remains in the pump.

7.5.1 Commissioning the hydroBLU system

Safety

NOTICE

See "General safety instructions for hydroBLU"

Procedure

⇨ Connect to the water supply line.
⇨ Check the water pressure and adjust if necessary (at least 2 bar, max. 5 bar).
⇨ Check the supply voltage.
⇨ Connect to the power supply.

⇨ Commission the hydroBLU™ controller (see controller manual, commissioning wizard).
⇨ Enter default data (e.g. height above sea level at the place of installation, air volume flow through the heat exchanger at maximum speed of all fans, air velocity, etc. – for the required data, refer to your technical documentation).
⇨ Set the parameters for the application.

NOTICE

– In connection with a Güntner controller, the hydroBLU™ functionality must first be activated via the controller (see controller instructions).

The humidification controller aicore™ hydroBLU communicates with the speed controller of the fans via 0 – 10 V signal.
The humidification controller aicore™ hydroBLU must be set acc. to the design of the heat exchanger and the fans. When switching on, the humidification controller automatically detects whether commissioning has already taken place. If this is the case, normal controlled operation is continued. If the humidification controller aicore™ hydroBLU detects that commissioning has not yet taken place, a commissioning procedure starts. After the procedure, all set parameters are saved. All values set during commissioning can later be viewed and changed individually via the menus.
Communication takes place internally with the humidification controller aicore™ fusion.
The humidification controller aicore™ fusion must be set acc. to the design of the heat exchanger. When switching on, the humidification controller automatically detects whether commissioning has already taken place. If this is the case, normal controlled operation is continued. If the aicore™ fusion detects that commissioning has not yet taken place, a commissioning procedure starts. After the procedure, all set parameters are saved. All values set during commissioning can later be viewed and changed individually via the menus.

⇨ If fine dirt particles are suspected to be present in the customer's water supply line, flush the water supply line:
  – Keep the local drain in the water supply line closed; open the drain valve of the hydroBLU™ system (via manual operation of the controller).
  – Open the control valve (via manual operation of the controller).
  – The water supply line is flushed; any dirt in the water supply line is flushed away or collects in the scale trap.
  – Close the control valve (via manual operation of the controller).
  – Depressurise the water supply line and clean the scale trap.
  – Reset the following to the values required for normal automatic operation: any previously made adjustments to external signals, adjustments to the draining in the local water supply line or on the controller (deactivate manual operation of the controller -> automatic operation is activated).
⇨ Check the function of the hydroBLU™:
  – Simulate the operating situation previously set in the controller (set the switch point for hydroBLU™ accordingly or simulate an increased ambient temperature; activate fan control signal -> e.g. for EC fans: 0 – 10 V and bus respectively with aicore™ air (previously GMM) or external specification of the fan control signal; with AC fans: with external ON/OFF release).
  – Check the correct operation of the hydroBLU™ system.
  – Check the water supply and distribution and rework if necessary (e.g. tightness of the water and drain system, even water supply to the hydroBLU™ pads, water pressure).
  – Reset any previously made adjustments to signals or on the controller.
  – Ensure that the hydroBLU™ controller is in automatic operation and not in manual operation.

The hydroBLU™ is now ready for operation.

NOTICE

To save energy in dry operation, the pads can be removed (winter operation). This measure allows the air to flow freely to the heat exchanger coil, eliminating the pressure drop caused by the humidification pads and improving the energy efficiency of the fans. During this time, the pads must be stored in a dry place where they are protected from damage and moisture.

7.5.2 Connect the unit to the system

⚠ WARNING

Danger of injuries and damage to property!

Improper connection to the the system causes hazards:

- Leaks result in the escape of the toxic working fluid NH_3 (see "Residual hazards due to refrigerant/ammonia (NH_3)", page 29).
- Soldering and welding work on pressurised parts can result in fires or explosions.
- Smoking or open light can cause fires or explosions.
- Ensure that stresses and vibrations from the system are not transferred to the unit.
- Only lay working fluid-side connections stress-free! The on-site pipeline system must be braced before connecting to the unit!
- Soldering work is only permitted on unpressurised units!
- Soldering and welding work is only permitted on unpressurised units!
- Evacuate the unit professionally in acc. with EN 378-2.
- Smoking is not permitted at the installation site, handling open flames is prohibited. Fire extinguishing equipment and fire extinguishing agents used to protect the unit and the operating staff must comply with the requirements of EN 378-3.
- Ensure that refrigerant detectors and alarm devices to warn of explosion or fire hazards, of concentrations hazardous to health and for control purposes are installed at the place of installation in accordance with EN 378-3, section 7.

⚠ WARNING

Risk of damage to the unit!

In order to avoid stray currents, heat exchanger tubes or parts of the casing etc. must not be used as a current return line during welding work as these supporting and fitting parts are not designed for the large currents during welding.

Failure to observe this can result in an excess current which can damage components and cause damage during operation.

▶ Firmly connect the insulated welding current return line at the welding point to the workpiece to be welded or the collector.

▶ Install the pipes in acc. with EN 378-1 and EN 378-3. Ensure here:

– Release devices to prevent liquid escapes must be provided and available.
– That in shutdown state under-cooled liquid is only present in the lowest possible amount in system sections – minimized number of “fluid sacks”.
– That when switching over a duty pump to a reserve pump no liquid, cold refrigerant remains in the pump.
– Avoid transmitting vibrations to the unit via conduits or pipes. If necessary, use vibration dampers.
– The condensate drain pipe must run with a slight slope of 3–5°.
– Liquid and pressure lines must always run apart and must be insulated on both sides

- Special treatment is required when using ammonia-soluble refrigerator oils in the refrigeration system; it may be necessary to install dryers (ammonia-soluble refrigerator oils have an even greater affinity to water than NH_3 itself).
- The free space around the unit must be big enough to ensure there is no danger to the unit; regular maintenance of the components must be possible, and it must also be possible to check and repair components, pipes and fittings.
- It must be possible to shut off the unit if a leak occurs. It must be possible to activate all devices used for diverting escaping working fluids from a safe position.
- Install the electrical equipment (e.g. for the fan drive, for ventilation, for lightning and for the alarm system) at the place of installation, taking into account the condensation of humidity and the formation of drip water, in accordance with EN 378-3, section 6.

7.5.3 Unit electrical connection and protection

All fans with rotating current drive can be operated via D-S switch-over with two different speeds:

- D: high speed
- S: lower speed

▶ Connect fan motors in acc. with motor connection wiring diagram in the motor terminal box or circuit diagram and check connection.

▶ Provide power supply in acc. with the specifications on the fan motor's type plate or circuit diagram:

▶ Protection of fan motors required: Connect thermocontacts for the motor protection and evaluate them, if available.

▶ Provide and secure all electrical lines to the connection boxes/switch cabinets acc. to EN 60204-1. Ensure compliance with the IP protection class. Observe the information in the circuit diagram. The protection class is specified in the chapter “Technical data - fans”.

⚠ WARNING

Risk of damage to property! If the fuse rating is too high there is the risk of injuries to people and damage to property.

NOTICE

The operation of the hydroSPRAY system is controlled by the Güntner GHM controller. If a different speed controller is to be used, the control signal must be sent to the GHM controller. Appropriate sensors can be optionally pre-installed at the factory for this case.

7.6 Perform acceptance test

⚠ WARNING

Danger of injuries and damage to property!

The release of the ammonia refrigerant (NH_3) can cause personal injury and even death (see "Residual hazards due to refrigerant/ammonia (NH_3)", page 29).

Perform the following acceptance test with an expert before starting up the unit after making important changes and after a unit exchange.

- Ensure that sufficient air can be sucked in and blown out.
- Ensure that the current supply is sufficient for the required energy: Compare the unit within the plant with the layouts of the plant and the connection diagrams.
- Check the unit for oscillations and vibrations that can be caused by the fans and the operation of the system. Eliminate vibrations and movements after consultation with the manufacturer or independently.
- Perform visual inspection of the structural design, the brackets and fixtures (materials, sequence, connections), the ability to operate and the arrangement of the fittings.
- Check and if necessary re-tighten all threaded connections, especially on the fans.
- Check installation of pipe connections.
- Check laying of working fluid-carrying connection pipes.
- Ensure that the unit is protected against mechanical damage.
- Ensure that the unit is protected against inadmissible heating up and cooling down.
- Check the fan blades protection.
- Ensure that optimum unit control and accessibility are guaranteed.
  - Is the unit placed so that it can be monitored and controlled from all sides at all times?
  - Is sufficient space provided for maintenance?
  - Are all working liquid-carrying components, connections and lines and all electrical connections and lines easy to access?
  - Are the tube identifications well visible?
- Check heat exchanger surfaces for dirt and clean as required (see "Clean unit", page 90).
- Perform function tests on the fans (rotation direction, power consumption, etc.).
- Check electrical connections of the fan motors for damage.
- Check the quality of the welding connections, the electrical connections and the fixture connections.
- Perform pressure test with test gas and with a test pressure of 1.1-times the permissible operating pressure: check the connection seals and detect leaks, e.g. with foaming agent, or similar.
- Check corrosion protection: Perform a visual inspection on all return bends, components and component holders that are not heat-insulated. Document and archive test results.
- Perform test run. Observe and check unit during test run, in particular for:
  - Fan smooth running (bearing noises, contact noises, imbalances, etc.).
  - Fan power consumption:
  - Leaks
- Report all defects to the manufacturer immediately. Remove defects following consultation with the manufacturer.
- Double-check the unit and the interaction of the unit with of the plant after approx. 48 operating hours, especially at the connections and the fans, and document the test result.

7.7 Test readiness for operation

- Ensure that all electrical protective measures are ready to function.
- Ensure that all working fluid-carrying connections are securely in place.
- Ensure that all electrical connections (fans) are securely in place.

7.8 Putting the unit into operation for the first time

⚠ WARNING

Danger of injuries and damage to property!

The release of the ammonia refrigerant (NH_3) can cause personal injury and even death (see "Residual hazards due to refrigerant/ammonia (NH_3)", page 29).

You can put the unit into operation, only when:

- The unit has been properly mounted and connected (see "Installation", page 57),
- You have performed a complete acceptance test (see "Perform acceptance test", page 75),
- You have checked the unit's readiness for operation (see "Test readiness for operation", page 76) and
- All safety precautions (see "Safety", page 46) have been taken.

Follow the instructions manual of the system!

Contact the manufacturer immediately if you want to operate the unit under different operating conditions as those defined in the order-related offer documents.

- Switch on the system including of the electrical system (see operating instructions of the system).
- Activate the unit:
  - Open the valves on the supply and drain side plant
  - Activate fans
- Wait until the operating point is reached. Once the operating point is reached, the unit is ready to operate (see instructions manual for the system).

Parameters for setting the operating point, see order-related offer documents.

Operating point:

- Condensation temperature
- Airflow volume
- Air inlet temperature

To ensure the specified operating point is complied with the actuators for the operating point setting must be secured against unauthorized access (e.g. by sealing, screwing on caps, removing hand wheels, etc.).

8 Operation

8.1 Safety

⚠ WARNING

Risk of damage to property!

To prevent damage to the heat exchangers, always connect them without force and torque. There must be no forces or moments acting on the heat exchanger at any time. Failure to observe this can result in leaks and further damage to the heat exchanger in the short and medium term.
Ensure that the outlet headers and flanges are not used as a climbing aid, e.g. during installation. They are not designed for external forces.
Ensure that no forces or moments act on the heat exchanger at any time by using suitable fixed bearings during pipe installation.

⚠ WARNING

Danger of cutting off, danger of pulling in!

On the rotating fan blades, there is a danger of fingers being cut off, hands being injured and loose parts such as hair, necklaces and parts of clothing being pulled in.
Do not operate the fans without protection guards!

⚠ WARNING

Risk of burns!

There is a risk of burns when touching parts of the unit (see "Thermal residual hazards", page 28).
Do not touch any parts of the unit without protective gloves if the unit is in operation or has not yet cooled down to ambient temperature after operation.

8.2 Putting the unit into operation

NOTICE

To prevent corrosion caused by stagnant water, units with water as working fluid must be put into operation within two weeks after filling.

To operate the unit, the refrigerating plant including the electrical system must be in operation. Commission the unit by opening the respective valves on the inlet and outlet side of the refrigerating plant, and by connecting it to the electrical system as follows (see operating instructions of the refrigerating plant):

- Ensure that a professional equipotential bonding has been performed
- Switch on the electrical system
- Open working fluid-carrying lines
- Switch on fans

8.3 Taking the unit out of operation

The units are system components of a refrigerating system. The unit is taken out of operation by switching off the refrigeration system in acc. with the refrigeration system instructions manual. To do this, the working fluid-carrying lines of the refrigeration system and the fans of the electrical system must be shut off (see refrigeration system instructions manual):

- Switch fans off
- Switch electrical system off
- Close working fluid-carrying lines
- **NOTE! When shut down consider max. operating pressure! If necessary, take precautions to ensure that it cannot be exceeded, or drain the device.**

NOTICE

With shutdown times of a month or longer put the fans into operation for approx. 2-4 hours a month to maintain their functionality.

8.3.1 Shutdown, dismantling and disposal

Safety

⚠ DANGER

Risk of injuries owing to electrical voltage!
Direct and indirect contact with live cables can cause serious injuries or death.

- Have the work carried out only by a qualified electrician.
- Work should be carried out in accordance with local regulations, e.g. DIN VDE 0105/EN 50110.

⚠ WARNING

Risk of fire and burns!
The humidification pads for the pre-cooling system are flammable if in contact with sparks, fire and high heat respectively, especially if they are dry. Burning pads can cause severe injuries and even death, and result in serious damage to property.

- Remove the pads from the unit prior to grinding, welding and hot work.
- Store the pads in a safe area for the duration of the work.

NOTICE

See "Safety" and "General safety instructions for hydroBLU"

Procedure

- Disconnect all systems from the power supply.
- Make sure that the system is drained.
- Follow the steps shown in chapter "Installation" in reverse order.
- Dispose of the materials separately according to the applicable laws and regulations. The pads can be disposed of with the residual waste.

8.4 Shutting the unit down

⚠ WARNING

Danger of injuries and damage to property!

Escaping NH_3 refrigerant can cause personal injury and even death (see "Residual hazards due to refrigerant/ammonia (NH_3)", page 29 and "Residual hazards caused by pressurised parts", page 31).

Ensure that the maximum operating pressure is not exceeded after the shutdown either!

NOTICE

Danger of corrosion and dirt build-up!

The refrigerant ammonia is highly hygroscopic, i.e. it attracts moisture.Moisture and dirt must not enter the unit.

Protect the unit against dust, dirt, moisture and wetness, damage and other harmful influences (see "Safety instructions for set-up and start-up", page 46).

With shutdown times of a month or longer put the fans into operation for approx. 2-4 hours a month to maintain their functionality.

- Take the unit out of operation (see "Taking the unit out of operation", page 79)
- Secure the unit:
  - When shutdown consider max. operating pressure (see "Technical data", page 37)! If necessary, take precautions so that it cannot be exceeded.
  - Secure the fan motor drives against switching on again
  - Secure working fluid-carrying lines against pressurizing with working fluid.
  - Secure against harmful influences at the place of installation or intermediate storage location (see "Safety instructions for set-up and start-up", page 46) so that the components of the unit are kept in good condition and the intended use and usability of the unit are maintained. To this end, appropriate storage conditions must be provided (see "Storage before installation", page 45) and preventive corrosion protection measures, regular checks of the functionality of the fans and regular inspections of the decommissioned unit must be carried out.
- Siphon off the unit: Completely release working fluid and, if applicable, refrigerator oil (see "Residual hazards with disposal", page 35instructions manual).

8.5 Putting the unit into operation after a shutdown

The unit must be put back into operation in acc. with the system-specific set-up in acc. with the instructions manual of the system as follows:

- Test the unit's readiness for operation (see "Test readiness for operation", page 76). Perform pressure test and visual inspection for corrosion protection.
  NOTE! The pressure test with recommissioning must only be carried out with appropriate media at appropriate test pressure.
- Put the unit into operation (see "Putting the unit into operation", page 78)

8.6 Changing the unit over to another working fluid

⚠ WARNING

Danger of injuries and damage to property!

Operating the unit with a different working fluid without the prior consent of the manufacturer can result in significant dangers (see "Improper use", page 23).

The unit must not be changed over to another working fluid without prior written consent of Güntner GmbH & Co. KG!

- Ensure that the unit manufacturer has agreed to the changeover.
- Ensure that the unit is filled with the correct working fluid. Ensure that all materials used in the unit are compatible with the new working fluid.
- Ensure that the permissible pressure is not exceeded.
- Check that the new working fluid can be used without requiring a new test certificate for the unit. Ensure that classification is complied with.
- The safety device for the unit must be swapped out or reset.
- Mixtures with residues of working fluid and oil, for example, must be prevented.
- All information concerning the new working fluid must be changed accordingly.
- Change the complete documentation including these instructions and the instructions manual of the system accordingly.
- Perform an acceptance test (see "Perform acceptance test", page 75).

9 Troubleshooting

9.1 Safety

⚠ WARNING

Danger of injuries and damage to property!

Faults not described in these instructions may only be rectified by Güntner GmbH & Co. KG. Contact the Güntner hotline.

Faults that are described in these instructions must only be removed by appropriately trained personnel (see "Personnel, care requirements", page 22).

With faults that occur during the operation, monitoring and maintenance of the complete system, inform Güntner GmbH & Co. KGimmediately.

9.2 Service

Office hours

Tel. +49 8141 242-190

E-mail: claims@guentner.com

Mon-Thurs: 7.30 am - 5 pm
Fri: 7:30 am - 13:00

9.3 Troubleshooting table

Fault	Possible cause(s)	Remedy
Fan motor not running	Power supply interrupted	Restore power supply
	Fan blade stuck	Enable fan to rotate freely
Bearing noises	Defective fan motor	Renew bearing or fan motor
Unit vibrating	Defective fan blades	Change fan blades
	Loose fan fixture	Tighten fixtures
Unit capacity not achieved	Coil is very dirty on the air side	Clean the coil
	Fans not running properly or down	Repair, exchange fans
	Working fluid pressurising defective (temperature and quantity insuffi-cient)	Set working fluid pressurising val-ues (temperature and quantity) to reference values.
Working fluid es-caping	Working fluid-carrying components of the unit are leaking	Switch off working fluid feed and fans, close leak

Fault	Possible cause(s)	Remedy
Humidification pads are not wetted with water	Water supply or power supply interrupted	Check the entire water supply line and installed equipment/valves for functionality or restore the power supply
Humidification pads insufficiently wetter with water	Scale trap/filter dirty	Clean or replace the scale trap/filter

10 Maintenance

10.1 Safety

10.1.1 Before starting all maintenance

⚠ WARNING

Risk of personal injury and damage to property due to escaping working fluid (see "Residual hazards due to refrigerant/ammonia (NH_3)", page 29).

Only perform maintenance work – especially welding work – on the leaking unit after completely removing the working fluid from the unit!

Perform the following safety measures before beginning all maintenance work:

- Siphon off the coil (heat exchanger) of the unit
- Clean and blow out the coil (heat exchanger) of the unit.

⚠ CAUTION

Risk of injury caused by corrosion!

The unit is exposed to corrosive environment for a long time. Due to the onset of corrosion, the unit loses stability and is no longer suitable for lifting by crane or industrial truck with forks and endangers bystanders.

Check load-bearing components, fasteners and fans of the unit for corrosion damage and load-bearing capacity regularly and replace them, if necessary.

Check all fixing devices, especially of the lifting accessories (e.g. crane lug screws/bolts), for lifting capacity and structural integrity, and replace them if necessary.

10.1.2 With all maintenance work

⚠ WARNING

Danger of injuries and damage to property with escaping ammonia refrigerant!
Escaping NH_3 refrigerant can cause the following hazard situations and injuries with leaks on the evaporator:

Warning against explosion-risk and fire-risk substances in the set-up room!
Unintentionally carried in oil residue and unintentionally carried in NH_3 refrigerant can ignite.

- Ensure that there is no unintentionally carried in NH_3 refrigerant and no unintentionally carried in oil in the set-up room.

- Keep the risk area free of direct and indirect ignition sources.
- Before releasing for maintenance for the unit obtain the required approvals for work that can involve ignition sources (e.g. grinding, welding, soldering, etc.).
- With all work involving ignition sources (e.g. grinding, welding, etc.) in the work area, keep suitable fire extinguishing equipment that meets the requirements of EN 378-3 at hand.
- Do no bring any open flames or hot gases (e.g. candles, matches, welding beads, welding sparks, glowing cinders or tobacco) into the set-up room.
- Ensure that there are no warmed up or hot surfaces (e.g. heaters, hotplates, bulbs, motor housings) in the set-up room.
- Ensure that no friction heat develops in the set-up room (e.g. overheated stores).

Warns against corrosive substances in the set-up room!
NH_3 refrigerant still present is corrosive. Contact with the skin, mucous membranes and the eyes with NH_3 refrigerant under defervescence causes chemical burns on the skin, mucous membranes and the eyes.

- Use eye protection!

- Use hand protection!

Warns against toxic and health-endangering irritants in the set-up room!
Still present NH_3 refrigerant under defervescence can evaporate. Inhalation of refrigerant vapour is poisonous.

- Escaping refrigerant vapour and escaping refrigerant liquid must not reach adjacent rooms, staircases, yards, passages or drainage systems.

- Use respiratory protection.
- Use a self-contained breathing apparatus for repair work in areas with high ammonia concentrations in the ambient air.
- Ensure the set-up room is well ventilated.
- Divert escaped refrigerant vapour and escaped refrigerant liquid safely.

Warns against cold!
Still present NH_3 refrigerant under defervescence has a temperature of -33 °C. Contact with NH_3 refrigerant under defervescence caused by spraying causes frostbite.

- Use eye protection!
- Use hand protection!

- Ensure that the unit in question is pressure-free before maintenance work begins or the working fluid is sucked up from the unit in question.
- Power off the electrical system and secure it against unintentional switching on again.
- Separate the unit to be maintained from the refrigeration system and secure it.

NOTICE

Danger of damage to property!
When working on the air inlet and air outlet feeds of the fans and the coil (heat exchanger), objects can get into the fans and cause malfunctions and damage to the components.

- Power off the fans and, where applicable, the heater rods with electric defrosting (accessory at customer's request) before beginning maintenance work and secure them against switching on again.
- After the work has finished do not allow any objects to get back into the inlet and outlet feeds of the fans or the set-up room.

10.1.3 After all maintenance work

⚠ WARNING

Risk of personal injury and damage to property due to escaping ammonia refrigerant (see "Residual hazards due to refrigerant/ammonia (NH_3)", page 29)!

Perform the following safety measures after finishing all maintenance work:

- Ensure the switching and activation devices, the measuring and display devices and the safety devices function properly.
- Ensure the working fluid fittings are functioning.
- Ensure that the swivel fan units (optional) and the hinged side covers are fixed in their original position and secured against unintentional or unauthorised opening.
- Check the identification of the pipelines and ensure this is visible and legible.
- Check the fixing and corrosion protection of the components in question.
- Ensure that the electrical connections (e.g. fans andare functioning.
- Ensure that the temperature and humidity at the place of installation correspond to the technical data.
- Perform a pressure test and a leak tightness test (see instructions manual of the system).
- Perform an acceptance test (see "Perform acceptance test", page 75)
- Perform a pressure test (see instructions manual of the system).

10.2 Inspection and maintenance plan

The regular checking of the safety-related important system part, in an ammonia refrigeration system, is a prerequisite for meeting the requirements of the Federal German Immission Control Act. Repeated tests in acc. with § 15 must be performed either by a “qualified person” in acc. with § 2, section 7 of the German Ordinance on Industrial Safety and Health, or by a certified inspection agency. The operator must determine the test intervals for the complete system and the system components on the basis of a safety-related evaluation. Nevertheless, as with every technical installation, whereby it can generally be said the most frequent causes are not material errors, but operating errors, certain incidents cannot be ruled out.

The checks to be performed are listed in the following sections as time-scaled checklists.

The following applies to the unit as a whole:

Measure	Method	Interval
Remove frost and perform partial cleaning	Mechanical	As required (visual inspection)
Perform complete cleaning	Warm water or environmentally safe cleaning agent that is compatible with the unit's materials	As required (visual inspection)
Check for leaks/leakage		Every 6 months
Check corrosion protection		Every 6 months
Check fastenings and load-bearing elements (e.g. crane lug screws/bolts) for corrosion and lifting capacity and structural integrity respectively; replace them if necessary	Mechanical	Every 12 months

10.2.1 Fans

The manufacturer's operating specifications take priority for this component. The Güntner GmbH & Co. KG recommends proceeding in accordance with the following inspection and maintenance plan:

d = daily, w = weekly, m = monthly, y = yearly				
Work to be performed	d	w	m	y
Check the fans for dirt build-ups. • With dirt build-ups: Clean fans (see "Clean unit", page 90).				X *
Check the fan drive for smooth running. • Vibrations on the unit: remove imbalances • Where required, tighten and correct blade fixtures and blade settings				X *
Fan bearing: Running sound and smoothness changes • Replace fan				X *
Fan motor: Is a new bearing due? • Replace fan				X *

d = daily, w = weekly, m = monthly, y = yearly				
Work to be performed	d	w	m	y
Fan wheel: corrosion on bolts (with threaded blades) • Replace fan				X *
Fan blades: Corrosion or damage on blades • Replace fan				X *

*) Recommended: every six months

10.2.2 Coil of the unit (heat exchanger)

⚠ WARNING
Risk of personal injury and damage to property due to escaping ammonia refrigerant (see "Residual hazards due to refrigerant/ammonia (NH_3)", page 29)!

d = daily, w = weekly, m = monthly, y = yearly				
Work to be performed	d	w	m	y
Check the coil for dirt accumulation. • In the event of dirt accumulation: Clean the coil (see "Clean unit", page 90).				X*
Check the coil for general condition • Damage found: Repair damage				X*
Check the coil for the operating point (see "Operation", page 78) • If change in fan capacity found: Restore required system-side conditions . • If change in surface temperatures found: Restore required system-side conditions .				X*
Check the coil and connections for leak tightness. • Repair the unit sections affected (see "Remove leaks", page 89).				X*
Check the coil for working fluid pressurising. • Restore required system-side conditions.				X
Check the coil for corrosion. • Corrosion or damage on core tubes, fins, support structures, tube connections, fixtures: repair unit sections affected.				X*

*) Recommended: every six months

10.2.3 Humidification pads

System section	Activity	Execution/interval [every ... months]
Frame/modules	Check position and fastening; correct position and fastening if necessary	6

System section	Activity	Execution/interval [every ... months]
Distribution hoses	Check position and tightness; correct position if necessary	6
	Replace distribution hoses	36
Fittings	Check the outside of the sensors and valves for dirt, damage, corrosion and correct mounting	6
	Check valves for function; check switching and control processes	6
	Function-maintaining cleaning (outside)	As required
Dirt trap/ filter (if fitted)	See manufacturer documentation	See manufacturer documentation
Humidification pads	Check for dirt build-up and clean as required	Daily
	Check for damage and wear and tear and replace humidification pads if required	12 (6 recommended)
Water supply and supply line	Check function and restore water supply if required	Weekly
Trays, drains	Check for dirt and solid substances or blockages and clean trays, free drains of solid substances if required	Weekly
Control and regulation	Functional check	12 & as required
	Check automatic draining of the hydroBLU system when it is out of operation	6 & as required

10.3 Maintenance work

10.3.1 Remove leaks

⚠ WARNING

Risk of personal injury and damage to property due to ammonia refrigerant (see "Residual hazards due to refrigerant/ammonia (NH_3)", page 29)!

- Have leaks removed as quickly as possible by an expert.
- Do not fill with a working fluid other than that specified in acc. with the order-related offer documents!
- Only put the unit back into operation when all leaks have been repaired.

▶ Perform all work including pressure, acceptance and functional test (see "Perform acceptance test", page 75 and "Test readiness for operation", page 76).

10.4 Clean unit

10.4.1 General

The following applies for cleaning: The operator must ensure that the cleaning agents are environmental friendly and compatible for the materials in the system. Harmful to the environment substances, e.g. acid-forming, are forbidden.

ATTENTION

When cleaning and passivating, follow the instructions of the manufacturer of the cleaning agent!

When using cleaning agents, pay attention to the corrosion resistance of the materials to the cleaning agent used!

- Clean casing by rinsing with warm water (approx. +25°C) and/or with environmentally friendly cleaning agents.
- Rinse the casing thoroughly with warm water after using cleaning agents. The unit must be free of cleaning agents to prevent corrosion.
- Allow casing to dry completely.
- Check working fluid-side and electrical connections (see "Test readiness for operation", page 76instructions manual).

10.4.2 clean the coil

- Drain the unit (see operating instructions of the plant).
- Shut off the unit (see operating instructions of the plant).
- Completely disconnect the fans (see operating instructions of the plant).
- Clean the coil (heat exchanger) with one of the following procedures:
  - Cleaning with compressed air (see "Cleaning with compressed air", page 91)
  - Hydraulic cleaning (see "Hydraulic cleaning", page 91)

⚠ CAUTION

Risk of damage to property!

The fins can be damaged with too high a pressure, too small a distance or a cleaning jet that hits the fins at an angle. Mechanical cleaning with hard objects (e.g. steel brushes, screw drivers, or similar) damages the heat exchanger.

- Use a pressure of max. 30 bar for hydraulic cleaning and max. 80 bar for cleaning with compressed air!
- Maintain a minimum distance from the fins of 200 mm!
- Always aim the jet vertically (max. ±5 degree deviation) at the fins!
- Do not use any hard objects when cleaning!

- Switch on the fans (see operating instructions of the plant).
- Open the liquid side (see operating instructions of the plant).
- Open the supply side (see operating instructions of the plant).

10.4.2.1 Cleaning with compressed air

- Blast heat exchanger with compressed air (max. 80 bar pressure) to remove dirt and contaminants.
  NOTE! Hold the jet of the compressed air cleaner vertically with respect to the heat exchanger (max. deviation of ±5 degrees) to prevent fins bending.

10.4.2.2 Hydraulic cleaning

⚠ WARNING

Warns against dangerous electrical voltage!
Direct and indirect contact with voltage-carrying parts of motors and electrical lines can cause serious injuries or death. Water and cleaning agents conduct electricity.

- When working with water or steam jets, power off the fans and secure them against switching on again.

NOTICE

Danger of damage to property!

Water or steam jets can damage fans, electrical lines or other components.

- Ensure that electrical connections and motors as well as components and stored goods at the place of installation are not hit by water or steam jets. Cover them if necessary.

- Always remove heavier damp or greasy dirt against the airflow direction, using a high-pressure water jet (max. 30 bar pressure) or a steam pressure jet (max. 30 bar pressure). In either case, use a flat spray nozzle (distance of at least 200 mm) and, if required, neutral cleaning agents. Always direct the jet at right angles to the fins (max. deviation of ±5 degrees). Please note:
  - With oily and greasy dirt it helps to add a cleaning agent to the water.
  - When using chemical cleaning agents, ensure that they do not attack the surfaces of the unit. After cleaning, the unit must be rinsed with warm water so that it is free of cleaning agents.
  - Cleaning should be done from inside to the outside (but always opposing the dirt onset) and from top to bottom, so that the dirt can be removed without returning.
  - Hold the jet of the compressed air cleaner vertical to the coil (max. deviation of ±5 degrees) to prevent the fins from bending.

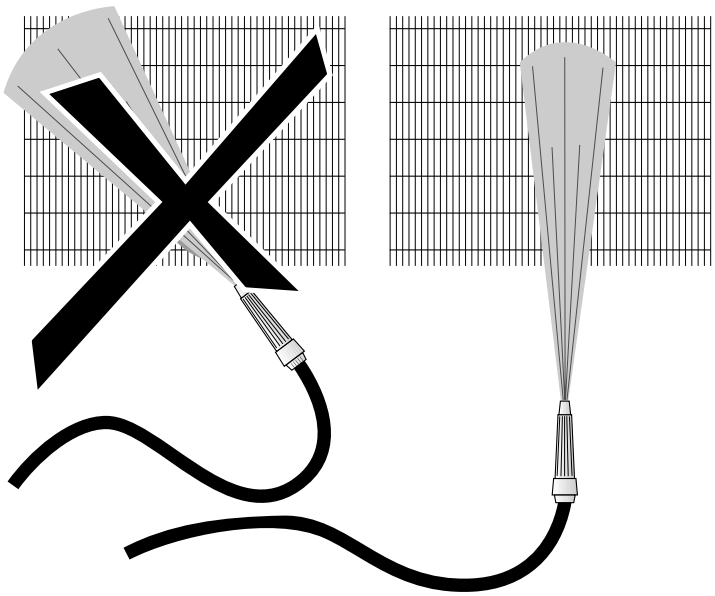

- Continue cleaning until all dirt has been removed.

10.4.3 Cleaning fans

⚠ WARNING

Danger of cutting off, pulling in!

There is a danger of cutting off fingers on the rotating fan blades, injury hazard for the hands and pulling in danger for loose elements such as hair, necklaces or clothing parts.

- Power off the unit before you begin maintenance work. Secure the unit against unintentional switching on again by removing the electric fuses for the unit. Secure the unit with a suitable warning sign referring to unintentional switching on.
- Put fans and guard grilles that were removed or opened for maintenance back into their original status without fail before you put the unit back into operation!

Dirt deposits on the fans, the streamers or air outlet connectors (if installed) and the fan protection grilles must be removed regularly because they can lead to imbalances or capacity loss or even destroy the fans. The fan motors themselves are maintenance-free.

- Power off the unit and secure it against unintentional switching on.
- Clean fans with one of the following procedures:
  NOTE! Danger of damage to property! Mechanical cleaning with hard objects (e.g. steel brushes, screw drivers, or similar) damages the fan. Forbidden!
  - Cleaning with compressed air: Blow fans with compressed air (max. 10 bar pressure; min. distance 200 mm) to remove dirt and contaminants. Continue cleaning until all dirt has been removed.
  - Cleaning with compressed air and brushes: Remove dry dust or dirt with a brush, a hand brush or with compressed air (max. 10 bar pressure, min. distance of 200 mm) or with a powerful industrial vacuum cleaner. Ensure here: use soft brushes (no steel brushes or similar)! Continue cleaning until all dirt has been removed.
- Mount protection grilles, streamers or air outlet connectors (if installed)
- Switch unit on

10.4.4 Cleaning humidification pads

Safety

NOTICE
See "General safety instructions for hydroBLU"

⚠ WARNING
Risk of injuries! Contaminated humidification pads can contain harmful germs. Ensure that you always wear a mask when working on humidification pads.

⚠ CAUTION
Risk of damage to property! Excessive water pressure can cause damage. Use a low pressure water hose. Ensure that the water pressure used does not damage the humidification pads. Do not clean the humidification pads with a high-pressure cleaner.

Procedure

Clean the humidification pads regularly. Depending on how dirty they are, the humidification pads can be cleaned in various ways. Care should be taken whatever method you use.

- Clean dry humidification pads with a broom or
- Clean dry humidification pads against the direction of the air flow with a vacuum cleaner.
- If necessary, remove stubborn dirt with a water hose.

The pads may need to be replaced. If this is the case, contact the Güntner service team.

After cleaning or maintenance:

- Ensure that the humidification water fittings work.
- Ensure that the humidification pads are aligned correctly and are in perfect condition.

11 Accessories

11.1 Fall protection

Introduction

The fall protection (railing, ladder, etc.) must be attached to condensers/gas coolers/dry coolers manufactured by Güntner GmbH & Co. KG if persons are required to walk on the unit surface. It is available as an optional extra that can be supplied as an installation kit to be mounted by customer. The separate instructions on the installation of the fall protection contain all the information required for on-site mounting by customer.

Overview

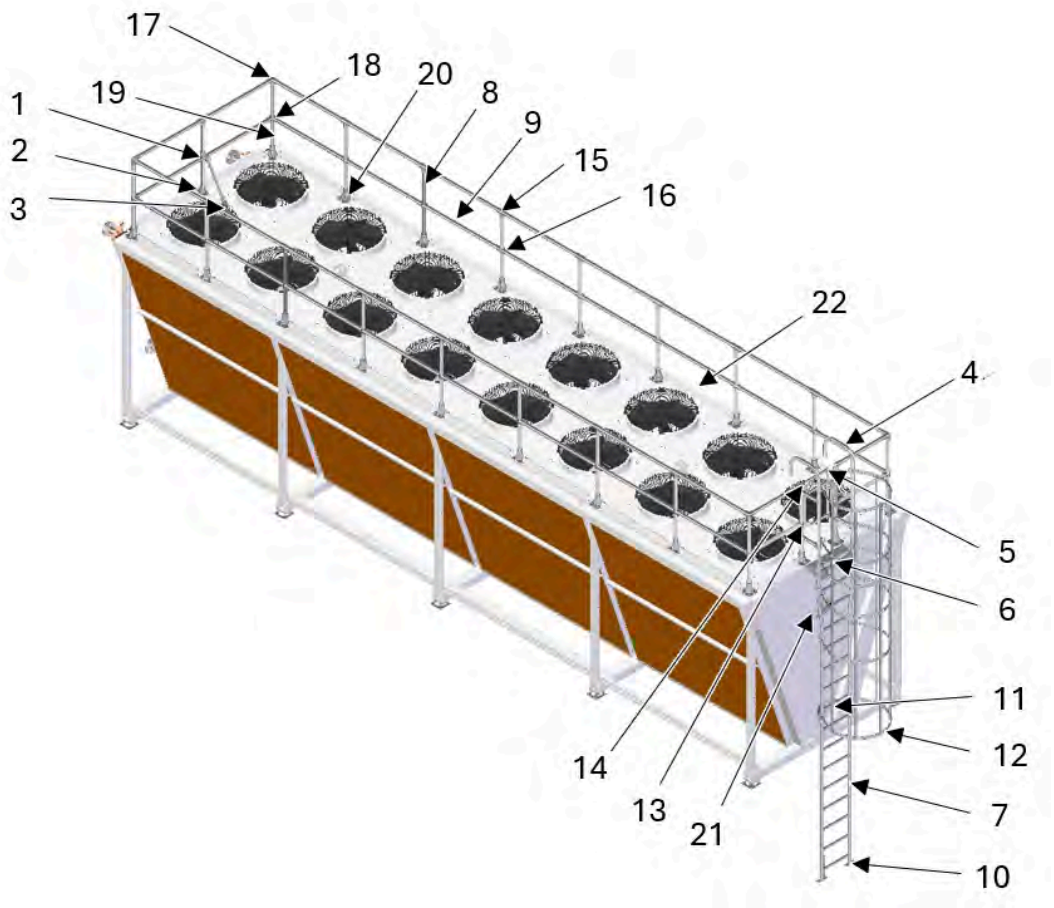

Single-row fall protection

No.	Designation
1	Single swivel socket
2	Floor mounting
3	Swivel flange (0 – 160°)
4	Handrail bend

No.	Designation
5	Safety gate
6	Access area
7	Ladder
8	Post
9	Horizontal tube
10	Ladder foot
11	Wall mounting
12	Ladder cage
13	90° fitting
14	90° elbow fitting
15	Three-socket tee
16	Two-socket cross fitting
17	90° side outlet elbow fitting
18	90° side outlet tee fitting
19	Rail support
20	Railing base
21	Label plate
22	Toeboard

Safety measures

Observe the following to prevent personal injury and damage to property:

- The fall protection may be used only in acc. with the proper intended use. Before using the fall protection, and when performing visual inspections and maintenance work, the operator must ensure that the design does not deviate from the specifications set out in the order-related offer documents.
- The operator must ensure that maintenance measures are performed in compliance with the system's operating instructions.
- Before climbing onto the unit, observe the following safety signs on the label plate located in the access area:

Completely disconnect

No unauthorised climbing

Unauthorised access prohibited

Wear safety shoes

Wear protective gloves

Wear a safety helmet

Warning of falling objects

Warning of the risk of tripping

Warning of hand injury

The unit surface must not be subjected to a load exceeding 150 kg

Safety instructions

⚠ WARNING

WARNING OF ELECTRIC SHOCK!
Due to a potential shift between components, it can happen that a person gets a little shock when touching the ladder/railing.
- Before starting any work, ensure that the ladder/handrail is connected to the building's equipotential bonding via the earthing clamp.

⚠ WARNING

WARNING OF FALLING OBJECTS!
Objects can fall from the unit due to improper mounting or human error and injure bystanders.
- Wear personal protective equipment (safety helmet) when working on or near the unit.
- Attach toeboards to both short and long sides of the unit.

⚠ WARNING

WARNING OF THE RISK OF SLIPPING, TRIPPING AND FALLING!

The operator or another person can slip while accessing the unit, on the unit surface or while climbing the ladder, or can trip over a protruding or projecting part. This can result in falls (also from a height), even if a railing is in place. This risk increases, particularly in adverse weather conditions such as water on the unit, clear ice or gusts of wind.

- Wear personal protective equipment (work gloves and slip-resistant safety shoes or safety shoes with slip-resistant overshoes).
- Stepping onto the unit surface is permitted only if the total weight does not exceed 150 kg and appropriate fall protection is in place.
- Before walking on the unit surface for maintenance or servicing, check for snow/ice and remove it if necessary.
- Watch out for obstacles and tripping hazards.
- Never step on the fans.
- In bad weather conditions (water on the unit, clear ice, gusts of wind), take particular care when walking on the unit surface!
- The fastening elements of the fall protection (railing and ladder construction) may be used only once, i.e. new fastening elements must be used for each assembly/disassembly.
- It is the responsibility of the operator to ensure that the ladder is secured against unauthorised climbing. Access only for persons who have permission from the operator and are appropriately trained.

⚠ WARNING

WARNING OF THE RISK OF FALLING DURING MOUNTING AND REMOVAL!

There is an increased risk of falling when mounting/removing the railing.

- Prior to mounting or removal, put on an alternative fall protection (e.g. PPE against falls from a height with a suitable attachment point).
- Cordon off the area around the unit (risk due to falling components).
- Do not remove the ladder until everyone has left the surface of the unit.
- Wear personal protective equipment (PPE).

⚠ WARNING

WARNING OF FROSTBITE!
Severe frostbite can result from contact with the surface of the designated path/side surface or fall protection (railings, ladder, etc.).
- Wear personal protective equipment (safety shoes, work gloves).

⚠ WARNING

WARNING OF THE RISK OF FALLING DUE TO CORROSION!
In the course of time, the fall protection (railing/ladder) can corrode. The time period depends on the corrosive factors in the ambient air. Due to the onset of corrosion, the fall protection (railing/ladder) can lose its stability, leading to an increased risk of falling. Corroded parts of the fall protection are a significant safety risk also to bystanders, as parts can come loose and fall. This can also result in damage to objects near the unit and to the unit itself.
- Check load-bearing components and fasteners of the fall protection (railing/ladder) for corrosion damage and load-bearing capacity at regular intervals.
- If corrosion occurs, cordon off access to the unit and replace the affected components.
- All work must be performed by specialist staff only.

⚠ CAUTION

WARNING OF THE RISK OF CRUSHING!
There is a risk of crushing if the components are handled improperly.
- Wear personal protective equipment (PPE).

NOTICE

Observe all safety instructions in the following sections:
- "Safety"
- "With all maintenance work"

Conditions of use

The fall protection is designed for the following ambient conditions:

- Ambient temperatures ranging from -30 °C to +50 °C
- Relative humidity ranging from 0 % to 90 %

The operator must be trained and experienced in handling the fall protection. The customer is responsible for any installations and mounted parts retrofitted to the fall protection by him or herself, and for the associated risks to the overall construction.

Mounting and removal

For information on the mounting and removal, refer to the separate instructions on the installation of the fall protection.

Maintenance

- ⇨ Clean the fall protection at regular intervals. The operator must determine the appropriate cleaning intervals.
- ⇨ Check the connection of the equipotential bonding to the building by performing a measurement. The operator must determine the inspection intervals on the basis of a job hazard analysis and in accordance with national standards and regulations.
- ⇨ Perform a visual inspection of the connection of the equipotential bonding to the building. The operator must determine the inspection intervals in accordance with national standards and regulations.
- ⇨ Before stepping onto the surface, check that the unit is free of snow and ice. Remove any snow and ice.
- ⇨ Check the load-bearing fasteners and load-bearing components for corrosion. Replace fasteners and components if necessary (see separate instructions on the installation).

12 Plans/diagrams

12.1 Electrics documentation

12.1.1 Fan motor connection diagram

See motor terminal box cover inside on the fan.